Ball Valve, CS, FL

Design

PASCO steel ball valve are designed and manufactured to provide maximum service life and dependability. All ball valves are full ported and meet the design requirements of American Petroleum Institute Standard API 608 & API 6D, British Standard BS 5351and generally conform to American Society of Mechanical Engineers standard ASME B16.34. Valves are available in a complete range of body/bonnet materials and trims.

Range of Materials

Standard body/bonnet materials include nine grades of carbon, low alloy and stainless steels. For special apolications they can be supplied in other grades of alloy and stainless steell. There's a full range of trim materials to match any service. Optional packing and gasket materials are available for a full range of service conditions.

Available Modifications for PASCO Steel Valves

* Trim Changes
* End Connection Modifications
* Packing and Gasket Changes
* Operator Mounting
* Handwheel Extensions
* Pressure Equalizing
* AS or FD
* Customer Specified Coatings
* Weld End Bore Changes
* Oxygen & Chlorine Cleaning & Packaging

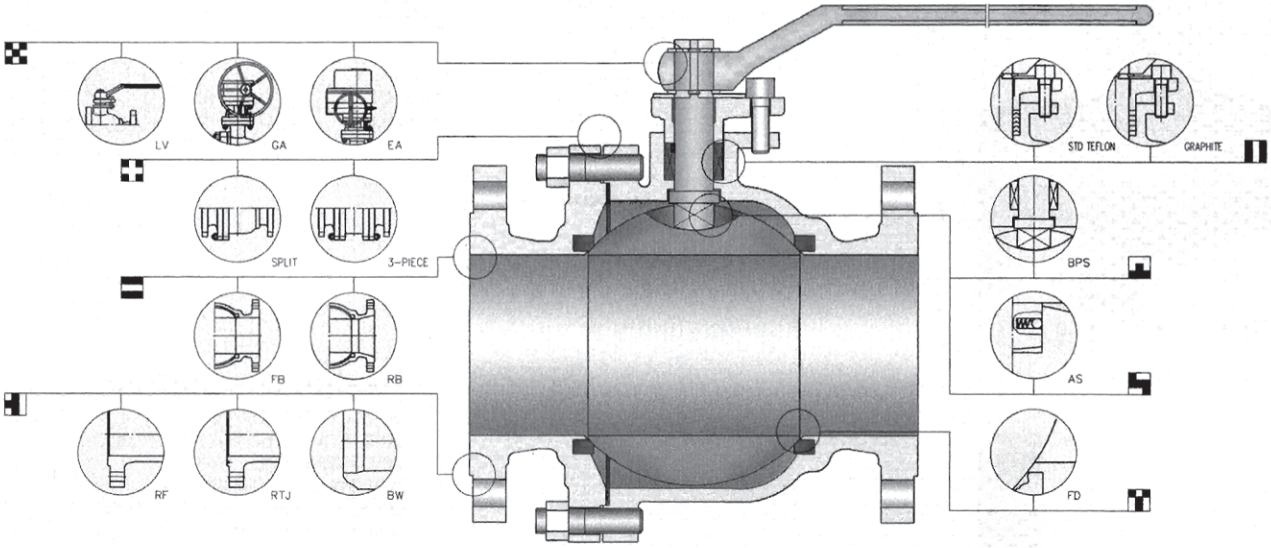

Operating

Extended lever for easy operation. Also available with gearing, motor actuators, pneumatic or hydraulic actuators for more difficult services.

BORE

Full Bore or Reduced Bore. Full-bore design provides exceptional flow control.

Packing

STD Packing Multiple V-TEFLON packing, combined with live loading, maintains packing compression under high-cycle and severe service applications. Graphite packing use situatior for high-temperature.

AS

Anti Static. A metallic contact is always granted between ball and stem / body to discharge eventual statics build - op during service.

BODY & BONNET

split or 3-piece, split body & bonnet for 12" & Small. Disassembles easily for repair or replacement of internal components.

End Connections

A choice of Flanged , RTJ flanged or Buttwelding end for piping flexibility.

BPS

Blow-out Proof Stem. A pressure-safe stem shoulder design that protects against failure under excess pressure.

FD

Fire Durable. Designed to API 607 or BS 6755 to grant their operation suitability in case of fire. Secondary metal-to-metal seal acts as backup if primary seal is destroyed by fire. Valves ordered for compliance with API 607 will be provided with graphite packing and gaskets.

Floating
Cast Steel Ball Valve 150Lb

Applicable standards:

★STEEL BALL VALVES, API 608/API 6D
★STEEL BALL VALVES, ISO 14313
★FIRE DURABLE, API 607
★ANTI STATIC, API 608
★STEEL VALVES, ASME B16.34
★FACE TO FACE, ASME B16.10
★END FLANGES, ASME B16.5
★BUTTWELDING ENDS, ASME B16.25
★INSPECTION AND TEST, API 598/ API 6D

Fig. No:

◎B1F56A B1F59L B1F56B
◎B1B56A B1B59L B1B56B

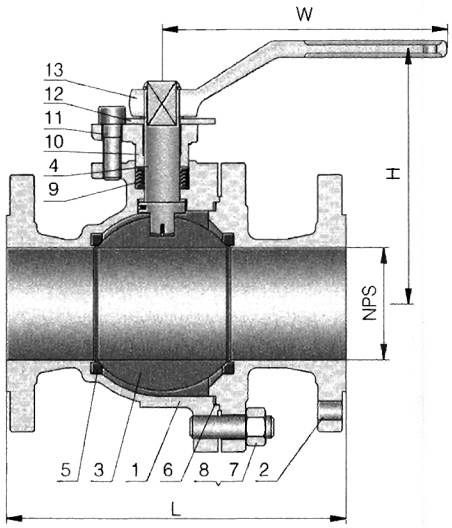

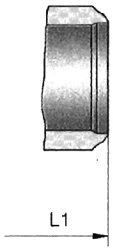

Materials of parts

NO	Part Name	ASTM Material		
		Carbon Steel	18Cr-9Ni-2Mo	Carbon Steel
1	Body	A216-WCB	A351-CF8M	A352-LCB
2	Bonnet	A216-WCB	A351-CF8M	A352-LCB
3	Ball	A182-F304[1]	A182-F316	A182-F304[1]
4	Stem	A276-304	A276-316	A276-304
5	Seat Ring	R.PTFE		
6	Bonnet Gasket	Graphite+304[2]	PTFE	Graphite+304[2]
7	Bonnet Stud	A193-B7	A193-B8	A320-L7
8	Bonnet Stud Nut	A194-2H	A194-8	A194-4
9	Packing	PTFE		
10	Gland Flange	A216-WCB	A351-CF8M	A352-LCB
11	Gland Bolt	A193-B7	A193-B8	A193-B7
12	Stop Plate	Carbon Steel	Carbon Steel+Zn	Carbon Steel
13	Handle	Carbon Steel		

Note: 1). A105+ENP optional
2). Spiral wound construction.

Design description:

▲FULL PORT DESIGN
▲BB, BOLTED BONNET, SPLIT BODY
▲FLOATING BALL TYPE
▲BLOW-OUT PROOF STEM
▲FIRE DURABLE CONSTRUCTION
▲ANTI STATIC DEVICE
▲STOPPER DEVICE
▲ISO 5211 MOUNTING PAD
▲FLANGED OR BUTTWELDING ENDS
▲AVAILABLE WITH WG OPERATOR

Dimensions data

NPS DN	1/2 15	3/4 20	1 25	1½ 40	2 50	2½ 65	3 80	4 100	6 150	8 200	10 250	12 300	in mm
							ANSI Class 150Lb						
L (RF)	4.25 108	4.62 117	5.00 127	6.50 165	7.00 178	7.50 190	8.00 203	9.00 229	15.50 394	18.00 457	21.00 533	24.00 610	in mm
L1 (BW)	5.50 140	6.00 152	6.50 165	7.50 190	8.50 216	9.50 241	11.12 283	12.00 305	18.00 457	20.50 521	22.00 559	25.00 635	in mm
H	2.12 55	2.12 55	2.75 70	3.50 90	4.12 105	6.12 155	7.25 185	8.00 205	10.00 255	11.00 280	13.50 345	16.50 420	in mm
W	5 130	5 130	6 160	8 200	14 350	16 400	20 500	20 500	24 600	32 800	32 800	32 800	in mm
WT (Kg)	2.3 1.8	3 2.8	4.5 3.7	7 6.2	9.5 8.5	15 14	19 21	33 35	93 98	160 170	200 225	280 295	RF BW

Floating

300Lb Cast Steel Ball Valve

Applicable standards:

★STEEL BALL VALVES, API 608/API 6D
★STEEL BALL VALVES, ISO 14313
★FIRE DURABLE, API 607
★ANTI STATIC, API 608
★STEEL VALVES, ASME B16.34
★FACE TO FACE, ASME B16.10
★END FLANGES, ASME B16.5
★BUTTWELDING ENDS, ASME B16.25
★INSPECTION AND TEST, API 598/ API 6D

Fig. No:

◎B3F56A B3F59L B3F56B
◎B3B56A B3B59L B3B56B
◎B3R56A B3R59L B3R56B

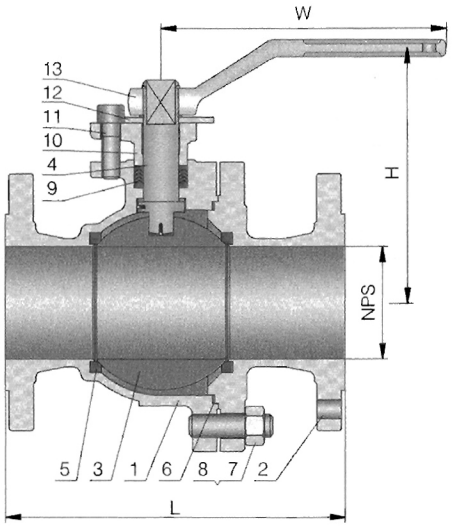

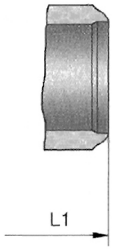

Materials of parts

NO	Part Name	ASTM Material		
		Carbon Steel	18Cr-9Ni-2Mo	Carbon Steel
1	Body	A216-WCB	A351-CF8M	A352-LCB
2	Bonnet	A216-WCB	A351-CF8M	A352-LCB
3	Ball	A182-F304[1]	A182-F316	A182-F304[1]
4	Stem	A276-304	A276-316	A276-304
5	Seat Ring	R.PTFE		
6	Bonnet Gasket	Graphite+304[2]	PTFE	Graphite+304[2]
7	Bonnet Stud	A193-B7	A193-B8	A320-L7
8	Bonnet Stud Nut	A194-2H	A194-8	A194-4
9	Packing	PTFE		
10	Gland Flange	A216-WCB	A351-CF8M	A352-LCB
11	Gland Bolt	A193-B7	A193-B8	A193-B7
12	Stop Plate	Carbon Steel	Carbon Steel+Zn	Carbon Steel
13	Handle	Carbon Steel		

Note: 1). A105+ENP optional
2). Spiral wound construction.

Design description:

▲FULL PORT DESIGN
▲BB, BOLTED BONNET, SPLIT BODY
▲FLOATING BALL TYPE
▲BLOW-OUT PROOF STEM
▲FIRE DURABLE CONSTRUCTION
▲ANTI STATIC DEVICE
▲STOPPER DEVICE
▲ISO 5211 MOUNTING PAD
▲FLANGED OR BUTTWELDING ENDS
▲AVAILABLE WITH WG OPERATOR

Dimensions data

NPS DN	1/2 15	3/4 20	1 25	1½ 40	2 50	2½ 65	3 80	4 100	6 150	8 200	10 250	12 300	in mm
							ANSI Class 300Lb						
L (RF)	5.50 140	6.00 152	6.50 165	7.50 190	8.50 216	9.50 241	11.12 283	12.00 305	15.88 403	19.75 502	22.38 568	25.50 648	in mm
L1 (BW)	5.50 140	6.00 152	6.50 165	7.50 190	8.50 216	9.50 241	11.12 283	12.00 305	18.00 457	20.50 521	22.00 559	25.00 635	in mm
H	2.12 55	2.12 55	2.75 70	3.50 90	4.12 105	6.12 153	7.25 187	8.00 206	10.00 255	11.00 280	13.50 345	16.50 420	in mm
W	5 130	5 130	6 160	8 200	14 350	16 400	20 500	20 500	24 600	32 800	32 800	32 800	in mm
WT (Kg)	2.5 1.8	3.5 2	5.5 3.2	10.5 5.5	14.5 8.7	23.5 15	30 18	55 36	118 85	200 152	250 182	330 232	RF BW

Floating
Cast Steel Ball Valve 600Lb

Applicable standards:

★STEEL BALL VALVES, API 608/API 6D
★STEEL BALL VALVES, ISO 14313
★FIRE DURABLE, API 607
★ANTI STATIC, API 608
★STEEL VALVES, ASME B16.34
★FACE TO FACE, ASME B16.10
★END FLANGES, ASME B16.5
★BUTTWELDING ENDS, ASME B16.25
★INSPECTION AND TEST, API 598/ API 6D

Fig. No:

©B6F56A B6F59L B6F56B
©B6B56A B6B59L B6B56B
©B6R56A B6R59L B6R56B

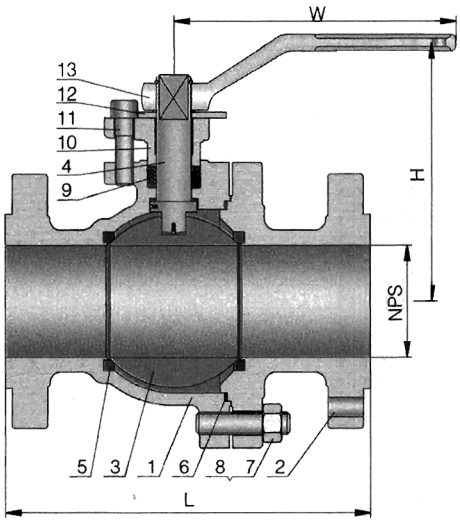

Materials of parts

NO	Part Name	ASTM Material		
		Carbon Steel	18Cr-9Ni-2Mo	Carbon Steel
1	Body	A216-WCB	A351-CF8M	A352-LCB
2	Bonnet	A216-WCB	A351-CF8M	A352-LCB
3	Ball	A182-F304[1)]	A182-F316	A182-F304[1)]
4	Stem	A276-304	A276-316	A276-304
5	Seat Ring	R.PTFE		
6	Bonnet Gasket	Graphite+304[2)]	PTFE	Graphite+304[2)]
7	Bonnet Stud	A193-B7	A193-B8	A320-L7
8	Bonnet Stud Nut	A194-2H	A194-8	A194-4
9	Packing	PTFE		
10	Gland Flange	A216-WCB	A351-CF8M	A352-LCB
11	Gland Bolt	A193-B7	A193-B8	A193-B7
12	Stop Plate	Carbon Steel	Carbon Steel+Zn	Carbon Steel
13	Handle	Carbon Steel		

Note: 1). A105+ENP optional
2). Spiral wound construction.

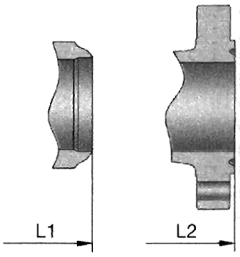

Design description:

▲FULL PORT DESIGN
▲BB, BOLTED BONNET, SPLIT BODY
▲FLOATING BALL TYPE
▲BLOW-OUT PROOF STEM
▲FIRE DURABLE CONSTRUCTION
▲ANTI STATIC DEVICE
▲STOPPER DEVICE
▲ISO 5211 MOUNTING PAD
▲FLANGED OR BUTTWELDING ENDS
▲AVAILABLE WITH WG OPERATOR

Dimensions data

NPS DN	1/2 15	3/4 20	1 25	1½ 40	2 50	2½ 65	3 80	4 100	6 150	8 200	10 250	12 300	in mm
ANSI Class 600Lb													
L/L1	6.50	7.50	8.50	9.50	11.50	13.00	14.00	17.00	22.00	-	-	-	in.
(RF/BW)	165	190	216	241	292	330	356	432	559	-	-	-	mm
L2	-	-	-	-	11.62	13.12	14.12	17.12	22.12	-	-	-	in.
(RTJ)	-	-	-	-	295	333	359	435	562	-	-	-	mm
H	2.38	2.38	3.00	4.00	4.75	6.88	8.38	9.25	11.38	-	-	-	in.
	61.5	61.5	78	101	120	174	212	234	289	-	-	-	mm
W	5	6	8	14	16	20	24	24	32	-	-	-	in.
	130	160	200	350	400	500	600	600	800	-	-	-	mm
WT	3.3	4.5	7.2	13.5	19	31	39	71	153	-	-	-	RF/RTJ
(Kg)	2.6	3.1	4.8	8	13	22	27	53	120	-	-	-	BW

Ball Valve CS, TM

Design

PASCO steel ball valve are designed and manufactured to provide maximum service life and dependability. All ball valves are full ported and meet the design requirements of American Petroleum Institute Standard API 608 & API 6D, British Standard BS 5351and generally conform to American Society of Mechanical Engineers standard ASME B16.34. Valves are available in a complete range of body/bonnet materials and trims.

Range of Materials

Standard body/bonnet materials include nine grades of carbon, low alloy and stainless steels. For special apolications they can be supplied in other grades of alloy and stainless steell. There's a full range of trim materials to match any service. Optional packing and gasket materials are available for a full range of service conditions.

Available Modifications for BAOYI Steel Valves

* Trim Changes
* End Connection Modifications
* Packing and Gasket Changes
* Operator Mounting
* Handwheel Extensions
* Pressure Equalizing
* AS or FD
* Customer Specified Coatings
* Weld End Bore Changes
* Oxygen & Chlorine Cleaning & Packaging

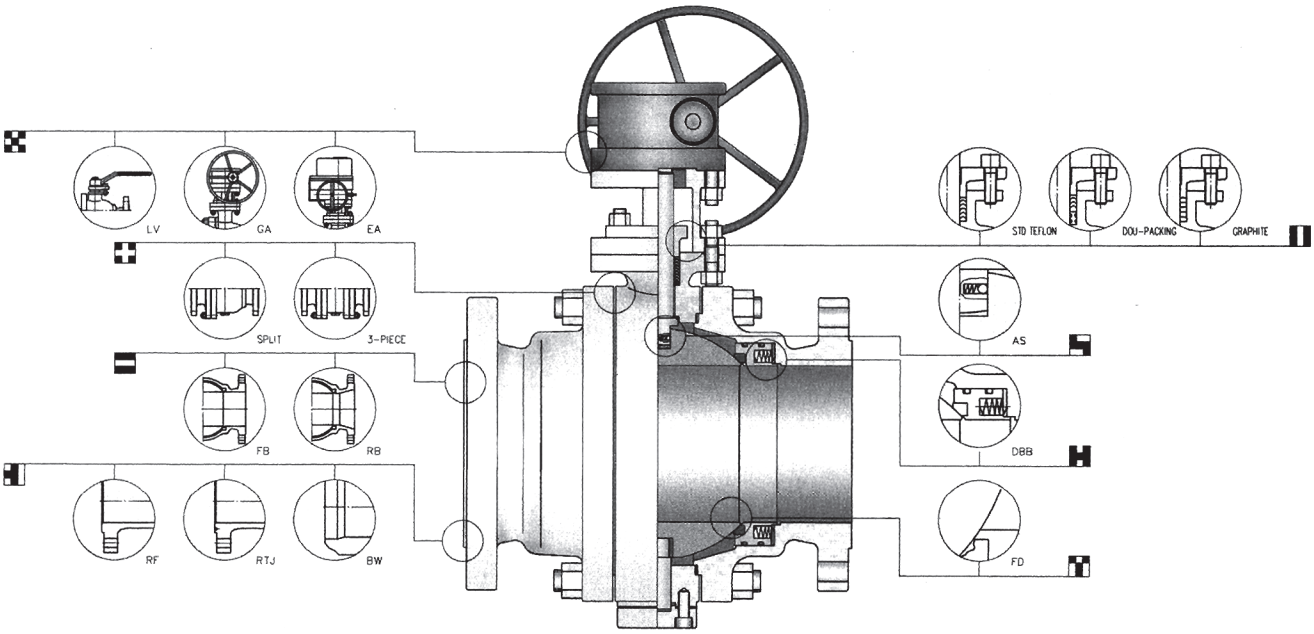

Operating
Extended lever for easy operation. Also available with gearing, motor actuators, pneumatic or hydraulic actuators for more difficult services.

BORE
Full Bore or Reduced Bore. Full-bore design provides exceptional flow control.

Packing
STD Packing Multiple V-TEFLON packing, combined with live loading, maintains packing compression under high-cycle and severe service applications. Graphite packing use situatior for high-temperature.

DDB
Double Block & Bleed. The body cavity is isolated when the ball is in either fully closed or fully opened position, the medium entrapped in it can easily be bled to avoid overpressure.

BODY & BONNET
split or 3-piece, split body & bonnet for 12" & Small. Disassembles easily for repair or replacement of internal components.

End Connections
A choice of Flanged , RTJ flanged or Buttwelding end for piping flexibility.

AS
Anti Static. A metallic contact is always granted between ball and stem / body to discharge eventual statics build - op during service.

FD
Fire Durable. Designed to API 607 or BS 6755 to grant their operation suitability in case of fire. Secondary metal-to-metal seal acts as backup if primary seal is destroyed by fire. Valves ordered for compliance with API 607 will be provided with graphite packing and gaskets.

Trunnion Mounted
Cast Steel Ball Valve 150Lb

PASCO

Applicable standards:

★STEEL BALL VALVES, API 608/API 6D
★STEEL BALL VALVES, ISO 14313
★FIRE DURABLE, API 607
★ANTI STATIC, API 608
★STEEL VALVES, ASME B16.34
★FACE TO FACE, ASME B16.10
★END FLANGES, ASME B16.5
★BUTTWELDING ENDS, ASME B16.25
★INSPECTION AND TEST, API 598/ API 6D

Fig. No:

◎BM1F56A BM1F59L BM1F56B
◎BM1B56A BM1B59L BM1B56B

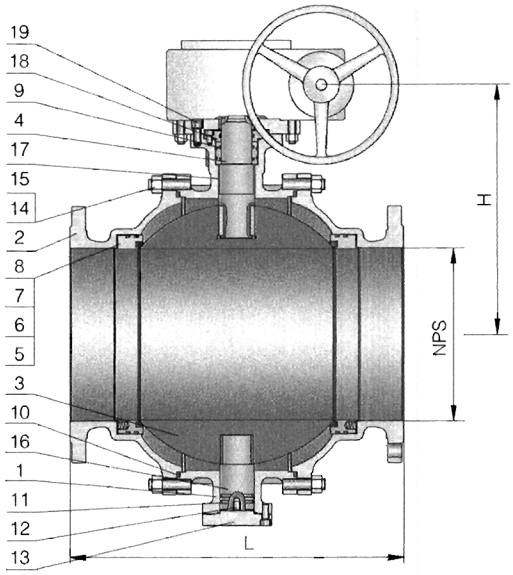

Materials of parts

NO	Part Name	ASTM Material		
		Carbon Steel	18Cr-9Ni-2Mo	Carbon Steel
1	Body	A216-WCB	A351-CF8M	A352-LCB
2	Bonnet	A216-WCB	A351-CF8M	A352-LCB
3	Ball	A182-F304[1]	A182-F316	A182-F304[1]
4	Stem	A276-304	A276-316	A276-304
5	Seat	A105+ENP	A182-F316	A350-LF2+ENP
6	Seat Insert	Glass Filled PTFE		
7	Seat Spring	A313-304	Inconel X-750	A313-304
8	Seat O-Ring	NBR	Viton	Viton
9	Stem O-Ring	NBR	Viton	Viton
10	Bonnet Gasket	Graphite+304[2]	Graphite+316[2]	Graphite+304[2]
11	Bonnet O-Ring	NBR	Viton	Viton
12	Antistatic Spring	A313-304	A313-316	A313-304
13	Grounding Plunger	A216-WCB	A182-F316	A182-F304
14	Bonnet Stud	A193-B7	A193-B8	A320-L7
15	Bonnet Stud Nut	A194-2H	A194-8	A194-4
16	Trunnion	A276-304	A276-316	A276-304
17	Trunnion Bearing	304+PTFE	316+PTFE	304+PTFE
18	Gland Flange	A216-WCB	A351-CF8M	A352-LCB
19	Gland Bolt	A193-B7	A193-B8	A193-B7
20	Stop Plate	Carbon Steel	Carbon Steel+Zn	Carbon Steel
21	Handle	Carbon Steel		

Note: 1). A105+ENP optional
2). Spiral wound construction.

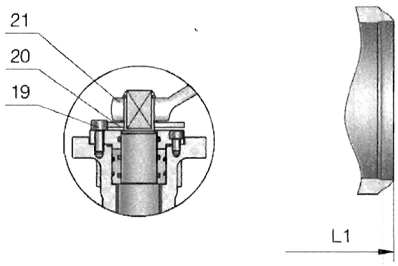

Design description:

▲FULL PORT DESIGN
▲BB, BOLTED BONNET, SPLIT BODY
▲THREE PIECE BODY FOR 12"& ABOVE
▲TRUNNION MOUNTED BALL TYPE
▲BLOW-OUT PROOF STEM
▲FIRE DURABLE CONSTRUCTION
▲ANTI STATIC DEVICE
▲STOPPER DEVICE
▲ISO 5211 MOUNTING PAD
▲FLANGED OR BUTTWELDING ENDS
▲AVAILABLE WITH WG OPERATOR

Dimensions data

NPS DN	2 50	2½ 65	3 80	4 100	6 150	8 200	10 250	12 300	14 350	16 400	18 450	20 500	24 600	26 650	28 700	30 750	32 800	36 900	in mm
ANSI Class 150Lb																			
L (RF)	7.00	7.50	8.00	9.00	15.50	18.00	21.00	24.00	27.00	30.00	34.00	36.00	42.00	45.00	49.00	51.00	54.00	60.00	in
	178	190	203	229	394	457	533	610	686	762	864	914	1067	1143	1245	1295	1372	1524	mm
L1 (BW)	8.50	9.50	11.12	12.00	18.00	20.50	22.00	25.00	30.00	33.00	36.00	39.00	45.00	49.00	53.00	55.00	60.00	68.00	in
	216	241	283	305	457	521	559	635	762	838	914	991	1143	1245	1346	1397	1524	1727	mm
H	7.00	7.50	8.25	9.25	20.88	24.62	25.62	30.75	31.00	36.25	38.25	43.38	45.25	50.75	55.12	64.12	70.88	80.75	in
	177	190	210	235	530	625	650	780	790	920	970	1100	1150	1290	1400	1630	1840	2050	mm
W	14	16	20	20	24	24	24	24	32	32	32	32	32	32	32	32	32	32	in
	350	400	500	500	600	600	600	600	800	800	800	800	800	800	800	800	800	800	mm
WT (Kg)	15	19	27	38	81	140	160	205	260	390	510	750	1200	1400	1860	2100	2530	2970	RF
	13.5	15.5	24.5	32.5	76	132	147	182	241	370	495	726	1125	1250	1640	1930	2390	2760	BW

Trunnion Mounted
300Lb Cast Steel Ball Valve

PASCO

Applicable standards:

★STEEL BALL VALVES, API 608/API 6D
★STEEL BALL VALVES, ISO 14313
★FIRE DURABLE, API 607
★ANTI STATIC, API 608
★STEEL VALVES, ASME B16.34
★FACE TO FACE, ASME B16.10
★END FLANGES, ASME B16.5
★BUTTWELDING ENDS, ASME B16.25
★NSPECTION AND TEST, API 598/ API 6D

Fig. No:

◎BM3F56A BM3F59L BM3F56B
◎BM3B56A BM3B59L BM3B56B
◎BM3R56A BM3R59L BM3R56B

Materials of parts

NO	Part Name	ASTM Material		
		Carbon Steel	18Cr-9Ni-2Mo	Carbon Steel
1	Body	A216-WCB	A351-CF8M	A352-LCB
2	Bonnet	A216-WCB	A351-CF8M	A352-LCB
3	Ball	A182-F304[1]	A182-F316	A182-F304[1]
4	Stem	A276-304	A276-316	A276-304
5	Seat	A105+ENP	A182-F316	A350-LF2+ENP
6	Seat Insert	Glass Filled PTFE		
7	Seat Spring	A313-304	Inconel X-750	A313-304
8	Seat O-Ring	NBR	Viton	Viton
9	Stem O-Ring	NBR	Viton	Viton
10	Bonnet Gasket	Graphite+304[2]	Graphite+316[2]	Graphite+304[2]
11	Bonnet O-Ring	NBR	Viton	Viton
12	Antistatic Spring	A313-304	A313-316	A313-304
13	Grounding Plunger	A216-WCB	A182-F316	A182-F304
14	Bonnet Stud	A193-B7	A193-B8	A320-L7
15	Bonnet Stud Nut	A194-2H	A194-8	A194-4
16	Trunnion	A276-304	A276-316	A276-304
17	Trunnion Bearing	304+PTFE	316+PTFE	304+PTFE
18	Gland Flange	A216-WCB	A351-CF8M	A352-LCB
19	Gland Bolt	A193-B7	A193-B8	A193-B7
20	Stop Plate	Carbon Steel	Carbon Steel+Zn	Carbon Steel
21	Handle	Carbon Steel		

Note: 1). A105+ENP optional
2) Spiral wound construction.

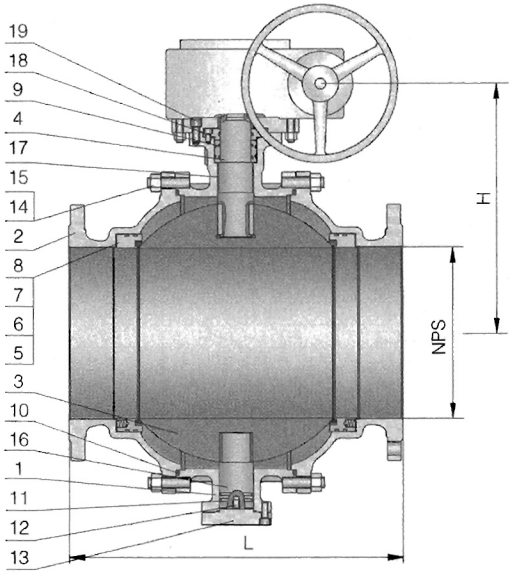

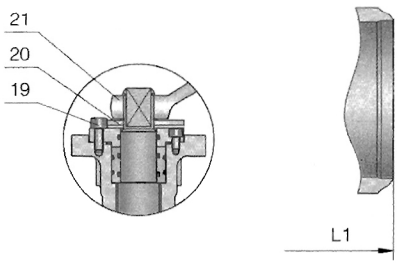

Design description:

▲FULL PORT DESIGN
▲BB, BOLTED BONNET, SPLIT BODY
▲THREE PIECE BODY FOR 12"& ABOVE
▲TRUNNION MOUNTED BALL TYPE
▲BLOW-OUT PROOF STEM
▲FIRE DURABLE CONSTRUCTION
▲ANTI STATIC DEVICE
▲STOPPER DEVICE
▲ISO 5211 MOUNTING PAD
▲FLANGED OR BUTTWELDING ENDS
▲AVAILABLE WITH WG OPERATOR

Dimensions data

NPS DN	2 50	2½ 65	3 80	4 100	6 150	8 200	10 250	12 300	14 350	16 400	18 450	20 500	24 600	26 650	28 700	30 750	32 800	36 900	in mm
ANSI Class 300Lb																			
L	8.50	9.50	11.12	12.00	15.88	19.75	22.38	25.50	30.00	33.00	36.00	39.00	45.00	49.00	53.00	55.00	60.00	–	in.
(RF)	216	241	283	305	403	502	568	648	762	838	914	991	1143	1245	1346	1397	1524	–	mm
L1	8.50	9.50	11.12	12.00	18.00	20.50	22.00	25.00	30.00	33.00	36.00	39.00	45.00	49.00	53.00	55.00	60.00	–	in.
(BW)	216	241	283	305	403	521	559	635	762	838	914	991	1143	1245	1346	1397	1524	–	mm
H	7.00	7.50	8.25	9.25	20.88	24.62	25.62	30.75	31.00	36.25	38.25	43.38	45.25	50.75	55.12	64.12	70.88	–	in.
	177	190	210	235	530	625	650	780	790	920	970	1100	1150	1290	1400	1630	1800	–	mm
W	14	16	20	20	24	24	24	24	32	32	32	32	32	32	32	32	32	–	in.
	350	400	500	500	600	600	600	600	800	800	800	800	800	800	800	800	800	–	mm
WT	19	24	34	48	101	175	200	255	325	485	635	935	1500	1750	2225	2450	2870	–	RF
(Kg)	14	16	25	34	82	145	155	185	238	375	516	782	1280	1375	1825	2180	2260	–	BW

Trunnion Mounted
Cast Steel Ball Valve 600Lb

PASCO

Applicable standards:

★STEEL BALL VALVES, API 608/API 6D
★STEEL BALL VALVES, ISO 14313
★FIRE DURABLE, API 607
★ANTI STATIC, API 608
★STEEL VALVES, ASME B16.34
★FACE TO FACE, ASME B16.10
★END FLANGES, ASME B16.5
★BUTTWELDING ENDS, ASME B16.25
★INSPECTION AND TEST, API 598/ API 6D

Fig. No:

◎BM6F56A BM6F59L BM6F56B
◎BM6B56A BM6B59L BM6B56B
◎BM6R56A BM6R59L BM6R56B

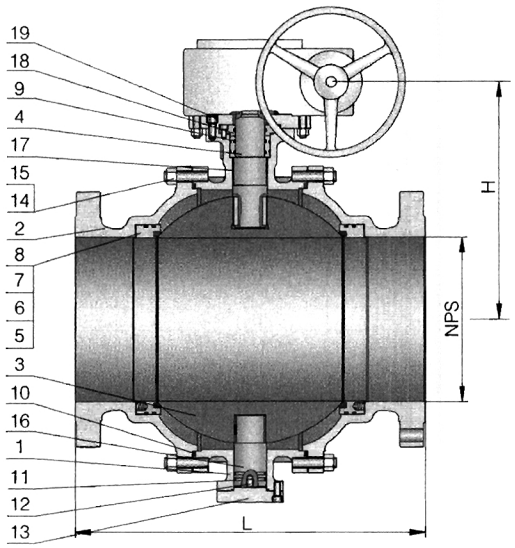

Materials of parts

NO	Part Name	ASTM Material		
		Carbon Steel	18Cr-9Ni-2Mo	Carbon Steel
1	Body	A216-WCB	A351-CF8M	A352-LCB
2	Bonnet	A216-WCB	A351-CF8M	A352-LCB
3	Ball	A182-F304[1]	A182-F316	A182-F304[1]
4	Stem	A276-304	A276-316	A276-304
5	Seat	A105+ENP	A182-F316	A350-LF2+ENP
6	Seat Insert	Glass Filled PTFE		
7	Seat Spring	A313-304	Inconel X-750	A313-304
8	Seat O-Ring	NBR	Viton	Viton
9	Stem O-Ring	NBR	Viton	Viton
10	Bonnet Gasket	Graphite+304[2]	Graphite+316[2]	Graphite+304[2]
11	Bonnet O-Ring	NBR	Viton	Viton
12	Antistatic Spring	A313-304	A313-316	A313-304
13	Grounding Plunger	A216-WCB	A182-F316	A182-F304
14	Bonnet Stud	A193-B7	A193-B8	A320-L7
15	Bonnet Stud Nut	A194-2H	A194-8	A194-4
16	Trunnion	A276-304	A276-316	A276-304
17	Trunnion Bearing	304+PTFE	316+PTFE	304+PTFE
18	Gland Flange	A216-WCB	A351-CF8M	A352-LCB
19	Gland Bolt	A193-B7	A193-B8	A193-B7
20	Stop Plate	Carbon Steel	Carbon Steel+Zn	Carbon Steel
21	Handle	Carbon Steel		

Note: 1). A105+ENP optional
2). Spiral wound construction.

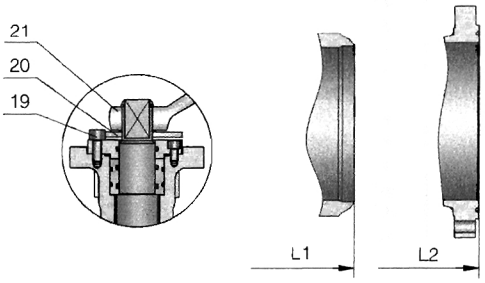

Design description:

▲FULL PORT DESIGN
▲BB, BOLTED BONNET, SPLIT BODY
▲THREE PIECE BODY FOR 12"& ABOVE
▲TRUNNION MOUNTED BALL TYPE
▲BLOW-OUT PROOF STEM
▲FIRE DURABLE CONSTRUCTION
▲ANTI STATIC DEVICE
▲STOPPER DEVICE
▲ISO 5211 MOUNTING PAD
▲FLANGED OR BUTTWELDING ENDS
▲AVAILABLE WITH WG OPERATOR

Dimensions data

NPS DN	2 50	2½ 65	3 80	4 100	6 150	8 200	10 250	12 300	14 350	16 400	18 450	20 500	24 600	26 650	28 700	in mm
ANSI Class 600Lb																
L/L1 (RF/BW)	11.50	13.00	14.00	17.00	22.00	26.00	31.00	33.00	35.00	39.00	43.00	47.00	55.00	57.00	61.00	in.
	292	330	356	432	559	660	787	838	889	991	1092	1194	1397	1448	1549	mm
L2 (RTJ)	11.62	13.12	14.12	17.12	22.12	26.12	31.12	33.12	35.12	39.12	43.12	47.25	55.38	57.50	61.50	in.
	295	333	359	435	562	664	791	841	892	994	1095	1200	1407	1461	1562	mm
H	7.12	7.62	8.50	9.50	21.25	25.00	26.12	31.12	31.88	36.38	38.75	44.50	46.62	52.50	57.00	in.
	180	193	215	241	540	635	665	790	810	925	985	1130	1185	1335	1450	mm
W	14	16	20	20	24	24	24	24	32	32	32	32	32	32	32	in.
	350	400	500	500	600	600	600	600	800	800	800	800	800	800	800	mm
WT (Kg)	26	35	58	81	142	287	540	780	1000	1300	1700	2100	3400	3800	4500	RF/RTJ
	19	25	42	51	85	200	395	610	805	1010	1350	1656	2775	3125	3790	BW

Trunnion Mounted
900Lb Cast Steel Ball Valve

Applicable standards:

★APPLICABLE STANDARDS:
★STEEL BALL VALVES, API 608/API 6D
★STEEL BALL VALVES, ISO 14313
★FIRE DURABLE, API 607
★ANTI STATIC, API 608
★STEEL VALVES, ASME B16.34
★FACE TO FACE, ASME B16.10
★END FLANGES, ASME B16.5
★BUTTWELDING ENDS, ASME B16.25
★INSPECTION AND TEST, API 598/ API 6D

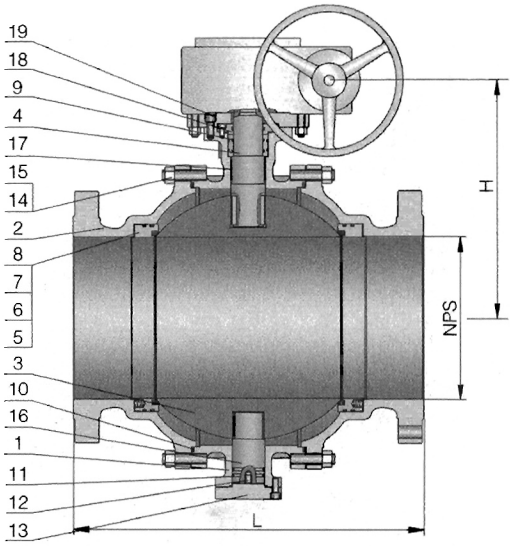

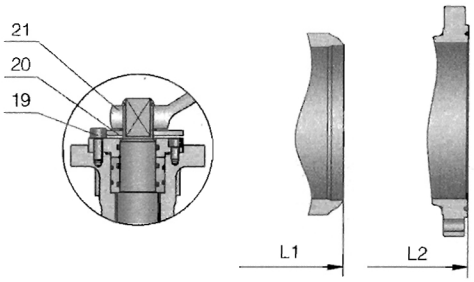

Fig. No:

◎BM9F56A BM9F59L BM9F56B
◎BM9B56A BM9B59L BM9B56B
◎BM9R56A BM9R59L BM9R56B

Materials of parts

NO	Part Name	ASTM Material		
		Carbon Steel	18Cr-9Ni-2Mo	Carbon Steel
1	Body	A216-WCB	A351-CF8M	A352-LCB
2	Bonnet	A216-WCB	A351-CF8M	A352-LCB
3	Ball	A182-F304[1]	A182-F316	A182-F304[1]
4	Stem	A276-304	A276-316	A276-304
5	Seat	A105+ENP	A182-F316	A350-LF2+ENP
6	Seat Insert	Glass Filled PTFE		
7	Seat Spring	A313-304	Inconel X-750	A313-304
8	Seat O-Ring	NBR	Viton	Viton
9	Stem O-Ring	NBR	Viton	Viton
10	Bonnet Gasket	Graphite+304[2]	Graphite+316[2]	Graphite+304[2]
11	Bonnet O-Ring	NBR	Viton	Viton
12	Antistatic Spring	A313-304	A313-316	A313-304
13	Grounding Plunger	A216-WCB	A182-F316	A182-F304
14	Bonnet Stud	A193-B7	A193-B8	A320-L7
15	Bonnet Stud Nut	A194-2H	A194-8	A194-4
16	Trunnion	A276-304	A276-316	A276-304
17	Trunnion Bearing	304+PTFE	316+PTFE	304+PTFE
18	Gland Flange	A216-WCB	A351-CF8M	A352-LCB
19	Gland Bolt	A193-B7	A193-B8	A193-B7
20	Stop Plate	Carbon Steel	Carbon Steel+Zn	Carbon Steel
21	Handle	Carbon Steel		

Note: 1). A105+ENP optional
2) Spiral wound construction

Design description:

▲FULL PORT DESIGN
▲BB, BOLTED BONNET, SPLIT BODY
▲THREE PIECE BODY FOR 12"& ABOVE
▲TRUNNION MOUNTED BALL TYPE
▲BLOW-OUT PROOF STEM
▲FIRE DURABLE CONSTRUCTION
▲ANTI STATIC DEVICE
▲STOPPER DEVICE
▲ISO 5211 MOUNTING PAD
▲FLANGED OR BUTTWELDING ENDS
▲AVAILABLE WITH WG OPERATOR

Dimensions data

NPS DN	2 50	2½ 65	3 80	4 100	6 150	8 200	10 250	12 300	14 350	16 400	18 450	20 500	24 600	in mm
ANSI Class 900Lb														
L/L1 (RF/BW)	14.50	16.50	15.00	18.00	24.00	29.00	33.00	38.00	40.50	44.50	48.00	52.00	61.00	in.
	368	419	381	457	610	737	838	965	1029	1130	1219	1321	1549	mm
L2 (RTJ)	14.62	16.62	15.12	18.12	24.12	29.12	33.12	38.12	40.88	44.88	48.50	52.50	61.75	in.
	371	422	384	460	613	740	841	968	1038	1140	1232	1334	1568	mm
H	8.62	9.25	10.25	15.38	25.75	30.25	31.75	38.00	38.50	45.00	47.00	53.50	56.00	in.
	219	235	260	390	655	770	805	965	980	1145	1195	1360	1425	mm
W	20	20	20	24	24	24	24	32	32	32	32	32	32	in.
	500	500	500	600	600	600	600	800	800	800	800	800	800	mm
WT (Kg)	31	43	68	98	171	345	650	940	1205	1565	2050	2535	3950	RF/RTJ
	23	31	51	61	102	240	480	735	965	1215	1625	1995	3335	BW

Trunnion Mounted
Cast Steel Ball Valve 1500Lb/2500Lb

PASCO

Applicable standards:

★STEEL BALI VALVES, API 608/API 6D
★STEEL BALL VALVES, ISO 14313
★FIRE DURABLE, API 607
★ANTI STATIC, API 608
★STEEL VALVES, ASME B16.34
★FACE TO FACE, ASME B16.10
★END FLANGES, ASME B16.5
★BUTTWELDING ENDS, ASME B16.25
★INSPECTION AND TEST, API 598/ API 6D

Fig. No:

○BM15F56A	BM15F59L	BM15F56B	○BM25F56A	BM25F59L	BM25F56B
○BM15B56A	BM15B59L	BM15B56B	○BM25B56A	BM25B59L	BM25B56B
○BM15R56A	BM15R59L	BM15R56B	○BM25R56A	BM25R59L	BM25R56B

Materials of parts

NO	Part Name	ASTM Material		
		Carbon Steel	18Cr-9Ni-2Mo	Carbon Steel
1	Body	A216-WCB	A351-CF8M	A352-LCB
2	Bonnet	A216-WCB	A351-CF8M	A352-LCB
3	Ball	A182-F304[1]	A182-F316	A182-F304[1]
4	Stem	A276-304	A276-316	A276-304
5	Seat	A105+ENP	A182-F316	A350-LF2+ENP
6	Seat Insert	Glass Filled PTFE		
7	Seat Spring	A313-304	Inconel X-750	A313-304
8	Seat O-Ring	NBR	Viton	Viton
9	Stem O-Ring	NBR	Viton	Viton
10	Bonnet Gasket	Graphite+304[2]	Graphite+316[2]	Graphite+304[2]
11	Bonnet O-Ring	NBR	Viton	Viton
12	Antistatic Spring	A313-304	A313-316	A313-304
13	Grounding Plunger	A216-WCB	A182-F316	A182-F304
14	Bonnet Stud	A193-B7	A193-B8	A320-L7
15	Bonnet Stud Nut	A194-2H	A194-8	A194-4
16	Trunnion	A276-304	A276-316	A276-304
17	Trunnion Bearing	304+PTFE	316+PTFE	304+PTFE
18	Gland Flange	A216-WCB	A351-CF8M	A352-LCB
19	Gland Bolt	A193-B7	A193-B8	A193-B7
20	Stop Plate	Carbon Steel	Carbon Steel+Zn	Carbon Steel
21	Handle	Carbon Steel		

Note: 1). A105+ENP optional
2). Spiral wound construction.

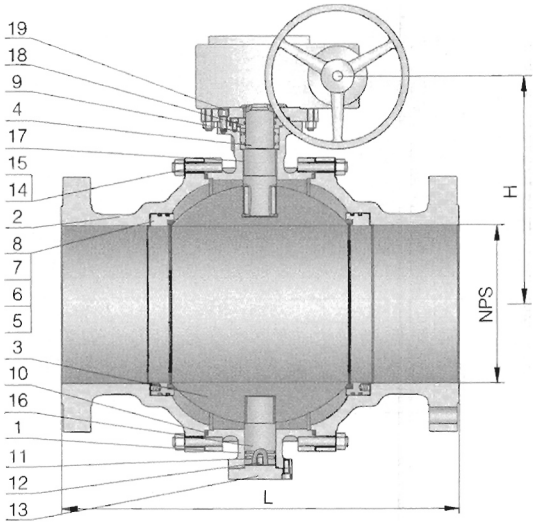

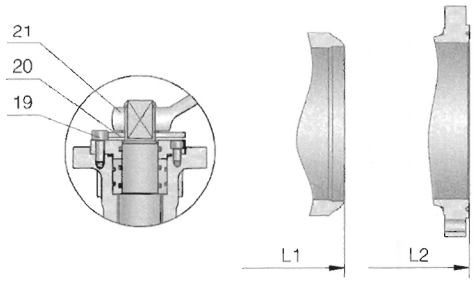

Design description:

▲FULL PORT DESIGN
▲BB, BOLTED BONNET, SPLIT BODY
▲THREE PIECE BODY FOR 12"& ABOVE
▲TRUNNION MOUNTED BALL TYPE
▲BLOW-OUT PROOF STEM
▲FIRE DURABLE CONSTRUCTION
▲ANTI STATIC DEVICE
▲STOPPER DEVICE
▲ISO 5211 MOUNTING PAD
▲FLANGED OR BUTTWELDING ENDS
▲AVAILABLE WITH WG OPERATOR

Dimensions data

NPS	DN	L/L1 (RF/BW)		L2 (RTJ)		H		W		WT (Kg)		L/L1 (RF/BW)		L2 (RTJ)		H		W		WT (Kg)	
		ANSI Class 1500Lb										ANSI Class 2500Lb									
2	50	14.50	368	14.62	371	11.25	285	20	500	49	33	17.75	451	17.88	454	12.00	304	20	500	55	41
2 1/2	65	16.50	419	16.62	422	12.00	306	20	500	67	44	20.00	508	21.25	540	12.88	327	24	600	76	55
3	80	18.50	470	18.62	473	13.25	338	24	600	106	73	22.75	578	23.00	584	14.25	362	24	600	120	91
4	100	21.50	546	21.62	549	20.00	506	24	600	153	87	26.50	673	26.88	683	21.25	540	24	600	173	110
6	150	27.75	705	28.00	711	33.50	852	24	600	268	145	36.00	914	36.50	927	35.88	911	32	800	302	182
8	200	32.75	832	33.12	841	39.38	1000	32	800	540	345	40.25	1022	40.88	1038	42.12	1070	32	800	612	430
10	250	39.00	991	39.38	1000	41.12	1045	32	800	1020	685	50.00	1270	50.88	1292	44.00	1120	32	800	1150	855
12	300	44.50	1130	45.12	1146	49.38	1255	32	800	1475	1050	56.00	1422	56.88	1445	53.00	1345	32	800	1665	1315
14	350	49.50	1257	50.25	1276	50.00	1270	32	800	1885	1385	–	–	–	–	–	–	–	–	–	–
16	400	54.50	1384	55.38	1407	58.50	1485	32	800	2455	1735	–	–	–	–	–	–	–	–	–	–
in.	mm	in.	mm	in.	mm	in.	mm	in.	mm	RF/RTJ	BW	in.	mm	in.	mm	in.	mm	in.	mm	RF/RTJ	BW

Ball Valve FS, FL

Design

PASCO steel ball valve are designed and manufactured to provide maximum service life and dependability. All ball valves are full ported and meet the design requirements of American Petroleum Institute Standard API 608 & API 6D, British Standard BS 5351and generally conform to American Society of Mechanical Engineers standard ASME B16.34. Valves are available in a complete range of body/bonnet materials and trims.

Range of Materials

Standard body/bonnet materials include nine grades of carbon, low alloy and stainless steels. For special apolications they can be supplied in other grades of alloy and stainless steell. There's a full range of trim materials to match any service. Optional packing and gasket materials are available for a full range of service conditions.

Available Modifications for PASCO Cast Steel Valves

* Trim Changes
* End Connection Modifications
* Packing and Gasket Changes
* Operator Mounting
* Handwheel Extensions
* Pressure Equalizing
* AS or FD
* Customer Specified Coatings
* Weld End Bore Changes
* Oxygen & Chlorine Cleaning & Packaging

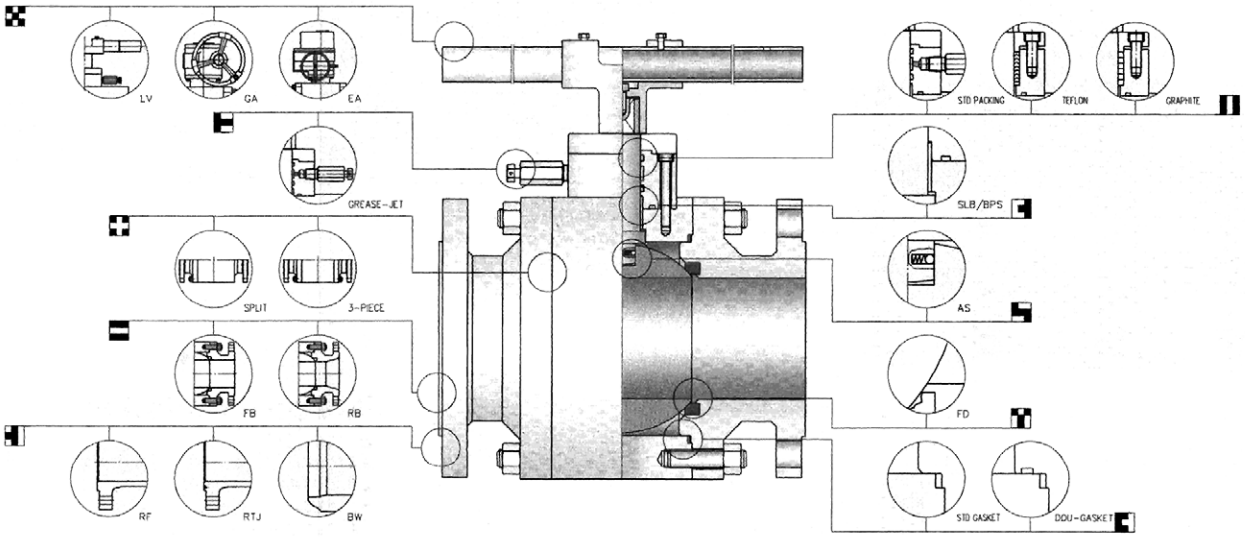

Operating

Extended lever for easy operation. Also available with gearing, motor actuators, pneumatic or hydraulic actuators for more difficult services.

BODY & BONNET

Split or 3-piece, split body & bonnet for 8" & Small. Disassembles e asily for repair or replacement of internal components.

End Connections

A choice of Flanged , RTJ flanged or Buttwelding end for piping flexibility.

SLB

Self-Lubrication Bearing. Non-maintenance, easy operation, low torque and longer life.

BPS

Blow-out Proof Stem. A pressure-safe stem shoulder design that protects against failure under excess pressure.

FD

Fire Durable. Designed to API 607 or BS 6755 to grant their operation suitability in case of fire. Secondary metal-to-metal seal acts as backup if primary seal is destroyed by fire. Valves ordered for compliance with API 607 will be provided with graphite packing and gaskets.

Grease-Jet Joint

Installed in prescriptive part accord with the apply and satisfied with ecumenical situations and realize seal in spot with maintenance easily.

BORE

Full Bore or R educed Bore. Full-bore design provides exceptional flow control.

Packing

STD Packing adopt high-performance rubber seal ring, STD Packing and TEFLON use situation for smooth pressure. With snap ring apply high-pressure s ituation. Graphite packing use situatior for high-temperature.

AS

Anti Static. A metallic contact is always granted between ball and stem / body to discharge eventual statics build - op during service.

GASKET

STD Gasket or DOU-Gasket. STD Gasket adopt high-performance rubber seal ring. DOU-Gasket adopt high-performance rubber seal ring and spiral wound graphite.

Floating
Forged Steel Ball Valve 150Lb

PASCO

Applicable standards:

★STEEL BALL VALVES, API 608/API 6D
★STEEL BALL VALVES, ISO 14313
★FIRE DURABLE, API 607
★ANTI STATIC, API 608
★STEEL VALVES, ASME B16.34
★FACE TO FACE, ASME B16.10
★END FLANGES, ASME B16.5
★BUTTWELDING ENDS, ASME B16.25
★INSPECTION AND TEST, API 598/ API 6D

Fig. No:

◎B1F56FA B1F59FL B1F56FB
◎B1B56FA B1B59FL B1B56FB

Materials of parts

NO	Part Name	ASTM Material		
		Carbon Steel	18Cr-9Ni-2Mo	Carbon Steel
1	Body	A105	A182-F316	A350-LF2
2	Bonnet	A105	A182-F316	A350-LF2
3	Ball	A182-F304[1]	A182-F316	A182-F304[1]
4	Stem	A276-304	A276-316	A276-304
5	Seat Ring	R.PTFE		
6	Bonnet Gasket	Graphite+304[2]	PTFE	Graphite+304[2]
7	Bonnet Stud	A193-B7	A193-B8	A320-L7
8	Bonnet Stud Nut	A194-2H	A194-8	A194-4
9	Packing	PTFE		
10	Gland	A105	A182-F316	A350-LF2
11	Gland Bolt	A193-B7	A193-B8	A193-B7
12	Stop Plate	Carbon Steel	Carbon Steel+Zn	Carbon Steel
13	Handle	Carbon Steel		

Note: 1). A105+ENP optional
2). Spiral wound construction.

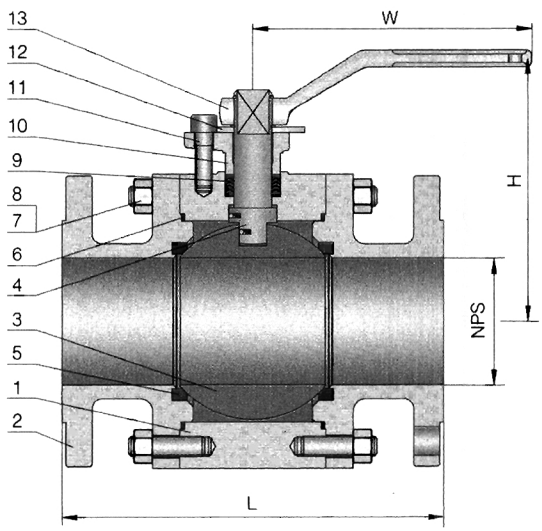

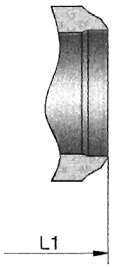

Design description:

▲FULL PORT DESIGN
▲BB, BOLTED BONNET, SPLIT BODY
▲FLOATING BALL TYPE
▲BLOW-OUT PROOF STEM
▲FIRE DURABLE CONSTRUCTION
▲ANTI STATIC DEVICE
▲STOPPER DEVICE
▲ISO 5211 MOUNTING PAD
▲FLANGED OR BUTTWELDING ENDS
▲AVAILABLE WITH WG OPERATOR

Dimensions data

NPS DN	1/2 15	3/4 20	1 25	1½ 40	2 50	2½ 65	3 80	4 100	6 150	8 200	10 250	12 300	in mm
ANSI Class 150Lb													
L (RF)	4.25	4.62	5.00	6.50	7.00	7.50	8.00	9.00	15.50	18.00	21.00	24.00	in.
	108	117	127	165	178	190	203	229	394	457	533	610	mm
L1 (BW)	5.50	6.00	6.50	7.50	8.50	9.50	11.12	12.00	18.00	20.50	22.00	25.00	in.
	140	152	165	190	216	241	283	305	457	521	559	635	mm
H	2.12	2.12	2.50	3.38	4.00	6.00	7.00	9.25	9.88	11.00	12.62	15.38	in.
	55	55	65	85	100	150	180	235	250	280	320	390	mm
W	8	8	12	12	16	16	24	24	24	24	32	32	in.
	200	200	300	300	400	400	600	600	600	600	800	800	mm
WT (Kg)	3.1	4.1	6	9.5	12.8	20	26	45	126	216	270	378	RF
	2.6	3.9	5.2	8.7	11.8	19	28	47	131	226	295	393	BW

Floating

300Lb Forged Steel Ball Valve

Applicable standards:

★STEEL BALL VALVES, API 608/API 6D
★STEEL BALL VALVES, ISO 14313
★FIRE DURABLE, API 607
★ANTI STATIC, API 608
★STEEL VALVES, ASME B16.34
★FACE TO FACE, ASME B16.10
★END FLANGES, ASME B16.5
★BUTTWELDING ENDS, ASME B16.25
★INSPECTION AND TEST, API 598/ API 6D

Fig. No:

◎B3F56FA B3F59FL B3F56FB
◎B3B56FA B3B59FL B3B56FB
◎B3R56FA B3R59FL B3R56FB

Materials of parts

NO	Part Name	ASTM Material		
		Carbon Steel	18Cr-9Ni-2Mo	Carbon Steel
1	Body	A105	A182-F316	A350-LF2
2	Bonnet	A105	A182-F316	A350-LF2
3	Ball	A182-F304[1]	A182-F316	A182-F304[1]
4	Stem	A276-304	A276-316	A276-304
5	Seat Ring	R.PTFE		
6	Bonnet Gasket	Graphite+304[2]	PTFE	Graphite+304[2]
7	Bonnet Stud	A193-B7	A193-B8	A320-L7
8	Bonnet Stud Nut	A194-2H	A194-8	A194-4
9	Packing	PTFE		
10	Gland	A105	A182-F316	A350-LF2
11	Gland Bolt	A193-B7	A193-B8	A193-B7
12	Stop Plate	Carbon Steel	Carbon Steel+Zn	Carbon Steel
13	Handle	Carbon Steel		

Note: 1). A105+ENP optional
2) Spiral wound construction.

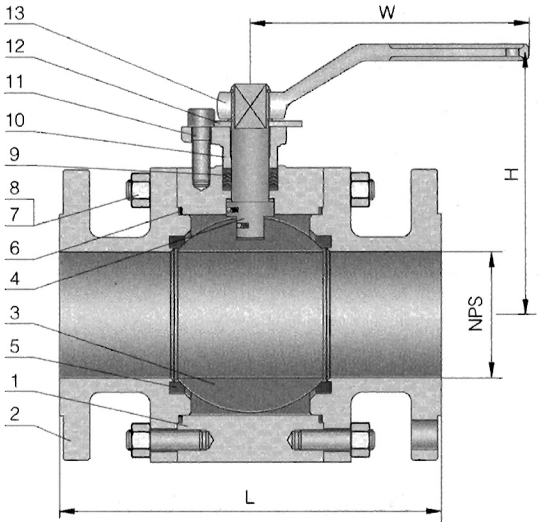

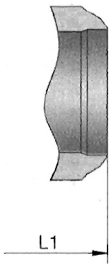

Design description:

▲FULL PORT DESIGN
▲B8, BOLTED BONNET, SPLIT BODY
▲FLOATING BALL TYPE
▲BLOW-OUT PROOF STEM
▲FIRE DURABLE CONSTRUCTION
▲ANTI STATIC DEVICE
▲STOPPER DEVICE
▲ISO 5211 MOUNTING PAD
▲FLANGED OR BUTTWELDING ENDS
▲AVAILABLE WITH WG OPERATOR

Dimensions data

NPS DN	1/2 15	3/4 20	1 25	1½ 40	2 50	2½ 65	3 80	4 100	6 150	8 200	10 250	12 300	in mm
ANSI Class 300Lb													
L (RF)	5.50	6.00	6.50	7.50	8.50	9.50	11.12	12.00	15.88	19.75	22.38	25.50	in.
	140	152	165	190	216	241	283	305	403	502	568	648	mm
L1 (BW)	5.50	6.00	6.50	7.50	8.50	9.50	11.12	12.00	18.00	20.50	22.00	25.00	in.
	140	152	165	190	216	241	283	305	457	521	559	635	mm
H	2.12	2.12	2.50	3.38	16.00	16.00	24.00	24.00	9.88	11.00	12.62	15.38	in.
	55	55	65	85	400	400	600	600	250	280	320	390	mm
W	8	8	12	12	10	12	14	19	24	24	32	32	in.
	200	200	300	300	250	300	350	480	600	600	800	800	mm
WT (Kg)	3.5	4.6	6.7	10.5	14.5	22	29	50	141	242	302	423	RF
	2.8	3.1	4.4	5.5	8.7	13.5	17	31	108	194	234	325	BW

Floating
Forged Steel Ball Valve 600Lb

Applicable standards:

★STEEL BALL VALVES, API 608/API 6D
★STEEL BALL VALVES, ISO 14313
★FIRE DURABLE, API 607
★ANTI STATIC, API 608
★STEEL VALVES, ASME B16.34
★FACE TO FACE, ASME B16.10
★END FLANGES, ASME B16.5
★BUTTWELDING ENDS, ASME B16.25
★INSPECTION AND TEST, API 598/ API 6D

Fig. No:

◎B6F56FA	B6F59FL	B6F56FB
◎B6B56FA	B6B59FL	B6B56FB
◎B6R56FA	B6R59FL	B6R56FB

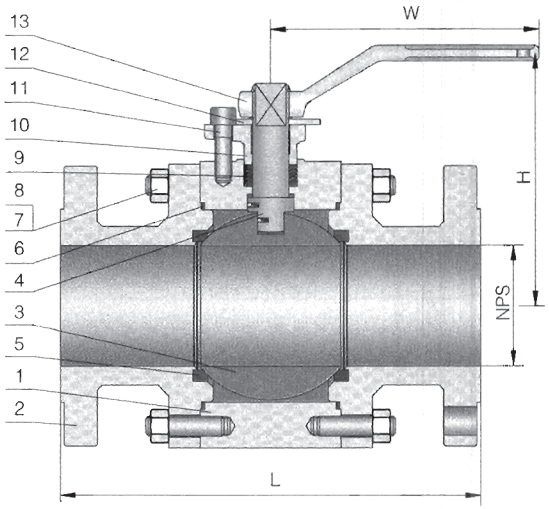

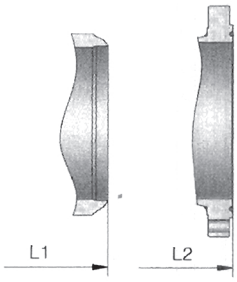

Materials of parts

NO	Part Name	ASTM Material		
		Carbon Steel	18Cr-9Ni-2Mo	Carbon Steel
1	Body	A105	A182-F316	A350-LF2
2	Bonnet	A105	A182-F316	A350-LF2
3	Ball	A182-F304[1]	A182-F316	A182-F304[1]
4	Stem	A276-304	A276-316	A276-304
5	Seat Ring	R.PTFE		
6	Bonnet Gasket	Graphite+304[2]	PTFE	Graphite+304[2]
7	Bonnet Stud	A193-B7	A193-B8	A320-L7
8	Bonnet Stud Nut	A194-2H	A194-8	A194-4
9	Packing	PTFE		
10	Gland	A105	A182-F316	A350-LF2
11	Gland Bolt	A193-B7	A193-B8	A193-B7
12	Stop Plate	Carbon Steel	Carbon Steel+Zn	Carbon Steel
13	Handle	Carbon Steel		

Note: 1). A105+ENP optional
2). Spiral wound construction

Design description:

▲FULL PORT DESIGN
▲BB, BOLTED BONNET, SPLIT BODY
▲FLOATING BALL TYPE
▲BLOW-OUT PROOF STEM
▲FIRE DURABLE CONSTRUCTION
▲ANTI STATIC DEVICE
▲STOPPER DEVICE
▲ISO 5211 MOUNTING PAD
▲FLANGED OR BUTTWELDING ENDS
▲AVAILABLE WITH WG OPERATOR

Dimensions data

NPS DN	1/2 15	3/4 20	1 25	1½ 40	2 50	2½ 65	3 80	4 100	6 150	8 200	10 250	12 300	in mm
ANSI Class 600Lb													
L/L1 (RF/BW)	6.50	7.50	8.50	9.50	11.50	13.00	14.00	17.00	22.00	–	–	–	in.
	165	190	216	241	292	330	356	432	559	–	–	–	mm
L2 (RTJ)	–	–	–	–	11.62	13.12	14.12	17.12	22.12	–	–	–	in.
	–	–	–	–	295	333	359	435	562	–	–	–	mm
H	2.25	2.25	2.62	3.50	4.12	6.25	7.50	9.75	10.38	–	–	–	in.
	58	58	68	89	105	158	190	247	262	–	–	–	mm
W	8	12	12	16	16	24	24	24	32	–	–	–	in.
	200	300	300	400	400	600	600	600	800	–	–	–	mm
WT (Kg)	4.5	5.5	8	12.5	18	27	35	61	172	–	–	–	RF
	3.8	4.1	5.6	7	12	18	23	43	139	–	–	–	BW

Design

PASCO steel ball valve are designed and manufactured to provide maximum service life and dependability. All ball valves are full ported and meet the design requirements of American Petroleum Institute Standard API 608 & API 6D, British Standard BS 5351and generally conform to American Society of Mechanical Engineers standard ASME B16.34. Valves are available in a complete range of body/bonnet materials and trims.

Range of Materials

Standard body/bonnet materials include nine grades of carbon, low alloy and stainless steels. For special apolications they can be supplied in other grades of alloy and stainless steell. There's a full range of trim materials to match any service. Optional packing and gasket materials are available for a full range of service conditions.

Available Modifications for PASCO Cast Steel Valves

* Trim Changes
* End Connection Modifications
* Packing and Gasket Changes
* Operator Mounting
* Handwheel Extensions
* Pressure Equalizing
* AS or FD
* Customer Specified Coatings
* Weld End Bore Changes
* Oxygen & Chlorine Cleaning & Packaging

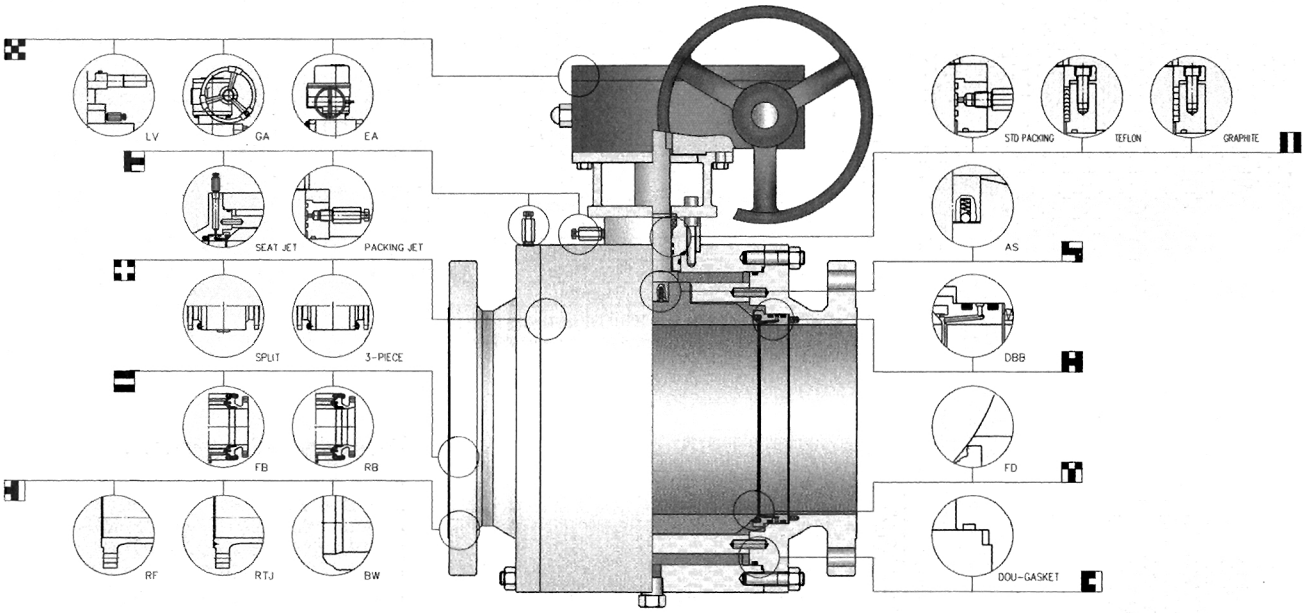

Operating

Extended lever for easy operation. Also available with gearing, motor actuators, pneumatic or hydraulic actuators for more difficult services.

BODY & BONNET

Split or 3–piece, split body & bonnet for 4" & Small. Disassembles easily for repair or replacement of internal components.

End Connections

A choice of Flanged , RTJ flanged or Buttwelding end for piping flexibility.

AS

Anti Static. A metallic contact is always granted between ball and stem / body to discharge eventual statics build – op during service.

FD

Fire Durable. Designed to API 607 or BS 6755 to grant their operation suitability in case of fire. Secondary metal–to–metal seal acts as backup if primary seal is destroyed by fire. Valves ordered for compliance with API 607 will be provided with graphite packing and gaskets.

Grease–Jet Joint

Installed in prescriptive part accord with the apply and satisfied with ecumenical situations and realize seal in spot with maintenance easily.

BORE

Full Bore or R educed Bore. Full–bore design provides exceptional flow control.

Packing

STD Packing adopt high–performance rubber seal ring, STD Packing and TEFLON use situation for smooth pressure. With snap ring apply high–pressure s ituation. Graphite packing use situatior for high–temperature.

DDB

Double Block & Bleed. The body cavity is isolated when the ball is in either fully closed or fully opened position, the medium entrapped in it can easily be bled to avoid overpressure.

GASKET

Adopt high–performance rubber seal ring and spiral wound graphite.

Trunnion Mounted
Forged Steel Ball Valve 150Lb

PASCO

Applicable standards:

★STEEL BALL VALVES, API 608/API 6D
★STEEL BALL VALVES, ISO 14313
★FIRE DURABLE, API 607
★ANTI STATIC, API 608
★STEEL VALVES, ASME B16.34
★FACE TO FACE, ASME B16.10
★END FLANGES, ASME B16.5
★BUTTWELDING ENDS, ASME B16.25
★INSPECTION AND TEST, API 598/ API 6D

Fig. No:

◎BM1F56FA BM1F59FL BM1F56FB
◎BM1B56FA BM1B59FL BM1B56FB

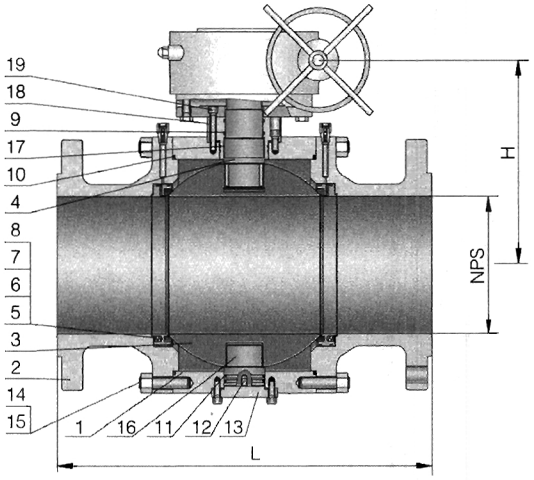

Materials of parts

NO	Part Name	ASTM Material		
		Carbon Steel	18Cr-9Ni-2Mo	Carbon Steel
1	Body	A105	A182-F316	A350-LF2
2	Bonnet	A105	A182-F316	A350-LF2
3	Ball	A182-F304[1]	A182-F316	A182-F304[1]
4	Stem	A276-304	A276-316	A276-304
5	Seat	A105+ENP	A182-F316	A350-LF2+ENP
6	Seat Insert	Glass Filled PTFE		
7	Seat Spring	A313-304	Inconel X-750	A313-304
8	Seat O-Ring	NBR	Viton	Viton
9	Stem O-Ring	NBR	Viton	Viton
10	Bonnet Gasket	Graphite+304[2]	Graphite+316[2]	Graphite+304[2]
11	Bonnet O-Ring	NBR	Viton	Viton
12	Antistatic Spring	A313-304	A313-316	A313-304
13	Grounding Plunger	A182-F304	A182-F316	A182-F304
14	Bonnet Stud	A193-B7	A193-B8	A320-L7
15	Bonnet Stud Nut	A194-2H	A194-8	A194-4
16	Trunnion	A276-304	A276-316	A276-304
17	Trunnion Bearing	304+PTFE	316+PTFE	304+PTFE
18	Gland	A105	A182-F316	A350-LF2
19	Gland Bolt	A193-B7	A193-B8	A193-B7
20	Stop Plate	Carbon Steel	Carbon Steel+Zn	Carbon Steel
21	Handle	Carbon Steel		

Note: 1). A105+ENP optional.
2). Spiral wound construction

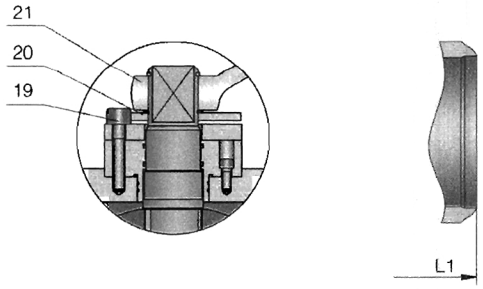

Design description:

▲FULL PORT DESIGN
▲BB, BOLTED BONNET, SPLIT BODY
▲THREE PIECE BODY FOR 12"& ABOVE
▲TRUNNION MOUNTED BALL TYPE
▲BLOW-OUT PROOF STEM
▲FIRE DURABLE CONSTRUCTION
▲ANTI STATIC DEVICE
▲STOPPER DEVICE
▲ISO 5211 MOUNTING PAD
▲FLANGED OR BUTTWELDING ENDS
▲AVAILABLE WITH WG OPERATOR

Dimensions data

NPS	2	2½	3	4	6	8	10	12	14	16	18	20	24	26	28	30	32	36	in
DN	50	65	80	100	150	200	250	300	350	400	450	500	600	650	700	750	800	900	mm
ANSI Class 150Lb																			
L (RF)	7.00	7.50	8.00	9.00	15.50	18.00	21.00	24.00	27.00	30.00	34.00	36.00	42.00	45.00	49.00	51.00	54.00	60.00	in.
	178	190	203	229	394	457	533	610	686	762	864	914	1067	1143	1245	1295	1372	1524	mm
L1 (BW)	8.50	9.50	11.12	12.00	18.00	20.50	22.00	25.00	30.00	33.00	36.00	39.00	45.00	49.00	53.00	55.00	60.00	68.00	in.
	216	241	283	305	457	521	559	635	762	838	914	991	1143	1245	1346	1397	1524	1727	mm
H	4.00	6.00	7.00	9.25	9.88	11.00	12.62	15.38	16.50	21.88	23.62	25.00	28.00	29.50	31.50	34.00	36.00	38.50	in.
	120	150	180	235	250	280	320	390	420	555	600	635	710	750	800	865	915	980	mm
W	16	16	24	24	24	24	32	32	32	32	32	32	32	40	40	40	40	40	in.
	400	400	600	600	600	600	800	800	800	800	800	800	800	1000	1000	1000	1000	1000	mm
WT (Kg)	28	35	55	80	190	290	445	570	780	1520	2300	2500	3950	4890	6300	7100	8950	13500	RF
	25	28	49	71	182	277	423	553	747	1481	2266	2460	3904	4939	6362	8149	9000	13570	BW

Trunnion Mounted

300Lb Forged Steel Ball Valve

Applicable standards:

★STEEL BALL VALVES, API 608/API 6D
★STEEL BALL VALVES, ISO 14313
★FIRE DURABLE, API 607
★ANTI STATIC, API 608
★STEEL VALVES, ASME B16.34
★FACE TO FACE, ASME B16.10
★END FLANGES, ASME B16.5
★BUTTWELDING ENDS, ASME B16.25
★INSPECTION AND TEST, API 598/ API 6D

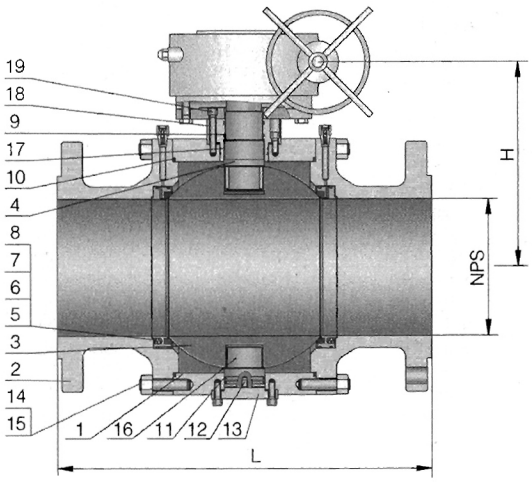

Fig. No:

◎BM3F56FA BM3F59FL BM3F56FB
◎BM3B56FA BM3B59FL BM3B56FB
◎BM3R56FA BM3R59FL BM3R56FB

Materials of parts

NO	Part Name	ASTM Material		
		Carbon Steel	18Cr-9Ni-2Mo	Carbon Steel
1	Body	A105	A182-F316	A350-LF2
2	Bonnet	A105	A182-F316	A350-LF2
3	Ball	A182-F304[1]	A182-F316	A182-F304[1]
4	Stem	A276-304	A276-316	A276-304
5	Seat	A105+ENP	A182-F316	A350-LF2+ENP
6	Seat Insert	Glass Filled PTFE		
7	Seat Spring	A313-304	Inconel X-750	A313-304
8	Seat O-Ring	NBR	Viton	Viton
9	Stem O-Ring	NBR	Viton	Viton
10	Bonnet Gasket	Graphite+304[2]	Graphite+316[2]	Graphite+304[2]
11	Bonnet O-Ring	NBR	Viton	Viton
12	Antistatic Spring	A313-304	A313-316	A313-304
13	Grounding Plunger	A182-F304	A182-F316	A182-F304
14	Bonnet Stud	A193-B7	A193-B8	A320-L7
15	Bonnet Stud Nut	A194-2H	A194-8	A194-4
16	Trunnion	A276-304	A276-316	A276-304
17	Trunnion Bearing	304+PTFE	316+PTFE	304+PTFE
18	Gland	A105	A182-F316	A350-LF2
19	Gland Bolt	A193-B7	A193-B8	A193-B7
20	Stop Plate	Carbon Steel	Carbon Steel+Zn	Carbon Steel
21	Handle	Carbon Steel		

Note: 1). A105+ENP optional.
2). Spiral wound construction.

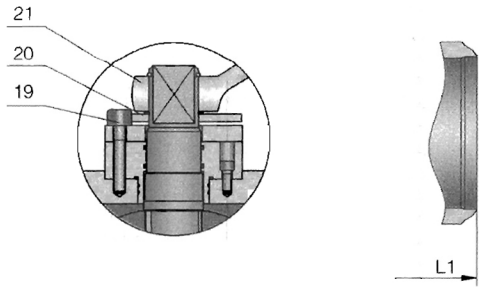

Design description:

▲FULL PORT DESIGN
▲BB, BOLTED BONNET, SPLIT BODY
▲THREE PIECE BODY FOR 12"& ABOVE
▲TRUNNION MOUNTED BALL TYPE
▲BLOW-OUT PROOF STEM
▲FIRE DURABLE CONSTRUCTION
▲ANTI STATIC DEVICE
▲STOPPER DEVICE
▲ISO 5211 MOUNTING PAD
▲FLANGED OR BUTTWELDING ENDS
▲AVAILABLE WITH WG OPERATOR

Dimensions data

NPS DN	2 50	2½ 65	3 80	4 100	6 150	8 200	10 250	12 300	14 350	16 400	18 450	20 500	24 600	26 650	28 700	30 750	32 800	36 900	in mm
ANSI Class 300Lb																			
L (RF)	8.50	9.50	11.12	12.00	15.88	19.75	22.38	25.50	30.00	33.00	36.00	39.00	45.00	49.00	53.00	55.00	60.00	-	in.
	216	241	283	305	403	502	568	648	762	838	914	991	1143	1245	1346	1397	1524	-	mm
L1 (BW)	8.50	9.50	11.12	12.00	18.00	20.50	22.00	25.00	30.00	33.00	36.00	39.00	45.00	49.00	53.00	55.00	60.00	-	in.
	216	241	283	305	403	521	559	635	762	838	914	991	1143	1245	1346	1397	1524	-	mm
H	4.00	6.00	7.00	9.25	9.88	11.00	12.62	15.38	16.50	21.88	23.62	25.00	28.00	29.50	31.50	34.00	36.00	-	in.
	120	150	180	235	250	280	320	390	420	555	600	635	710	750	800	865	915	-	mm
W	16	16	24	24	24	24	32	32	32	32	32	32	32	40	40	40	40	-	in.
	400	400	600	600	600	600	800	800	800	800	800	800	800	1000	1000	1000	1000	-	mm
WT (Kg)	30	40	60	90	200	325	490	690	990	1810	2620	2860	4430	5430	6810	7655	9590	-	RF
	24	31	49	72	169	280	424	598	872	1665	2440	2635	4075	4880	6225	7115	9230	-	BW

Trunnion Mounted
Forged Steel Ball Valve 600Lb

PASCO

Applicable standards:

★STEEL BALL VALVES, API 608/API 6D
★STEEL BALL VALVES, ISO 14313
★FIRE DURABLE, API 607
★ANTI STATIC, API 608
★STEEL VALVES, ASME B16.34
★FACE TO FACE, ASME B16.10
★END FLANGES, ASME B16.5
★BUTTWELDING ENDS, ASME B16.25
★INSPECTION AND TEST, API 598/ API 6D

Fig. No:

BM6F56FA BM6F59FL BM6F56FB
BM6B56FA BM6B59FL BM6B56FB
BM6R56FA BM6R59FL BM6R56FB

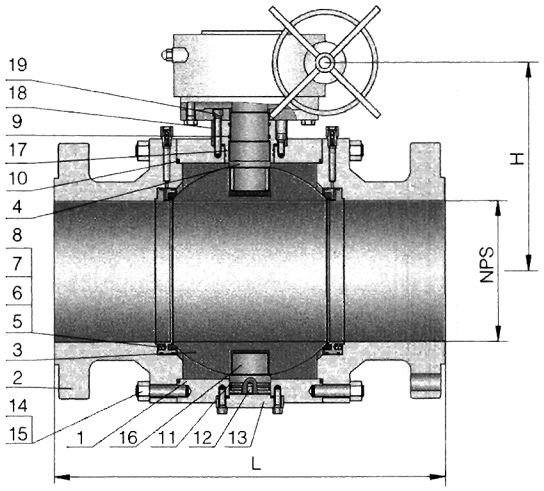

Materials of parts

NO	Part Name	ASTM Material		
		Carbon Steel	18Cr-9Ni-2Mo	Carbon Steel
1	Body	A105	A182-F316	A350-LF2
2	Bonnet	A105	A182-F316	A350-LF2
3	Ball	A182-F304[1]	A182-F316	A182-F304[1]
4	Stem	A276-304	A276-316	A276-304
5	Seat	A105+ENP	A182-F316	A350-LF2+ENP
6	Seat Insert	Glass Filled PTFE		
7	Seat Spring	A313-304	Inconel X-750	A313-304
8	Seat O-Ring	NBR	Viton	Viton
9	Stem O-Ring	NBR	Viton	Viton
10	Bonnet Gasket	Graphite+304[2]	Graphite+316[2]	Graphite+304[2]
11	Bonnet O-Ring	NBR	Viton	Viton
12	Antistatic Spring	A313-304	A313-316	A313-304
13	Grounding Plunger	A182-F304	A182-F316	A182-F304
14	Bonnet Stud	A193-B7	A193-B8	A320-L7
15	Bonnet Stud Nut	A194-2H	A194-8	A194-4
16	Trunnion	A276-304	A276-316	A276-304
17	Trunnion Bearing	304+PTFE	316+PTFE	304+PTFE
18	Gland	A105	A182-F316	A350-LF2
19	Gland Bolt	A193-B7	A193-B8	A193-B7
20	Stop Plate	Carbon Steel	Carbon Steel+Zn	Carbon Steel
21	Handle	Carbon Steel		

Note: 1). A105+ENP optional.
2). Spiral wound construction.

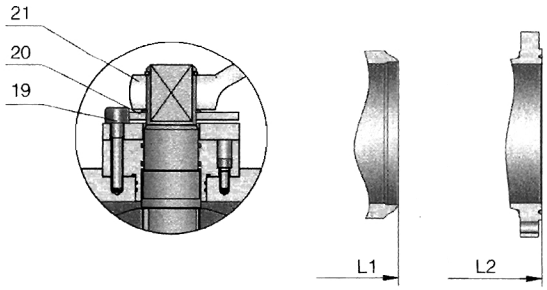

Design description:

▲FULL PORT DESIGN
▲BB, BOLTED BONNET, SPLIT BODY
▲THREE PIECE BODY FOR 12"& ABOVE
▲TRUNNION MOUNTED BALL TYPE
▲BLOW-OUT PROOF STEM
▲FIRE DURABLE CONSTRUCTION
▲ANTI STATIC DEVICE
▲STOPPER DEVICE
▲ISO 5211 MOUNTING PAD
▲FLANGED OR BUTTWELDING ENDS
▲AVAILABLE WITH WG OPERATOR

Dimensions data

NPS	2	2½	3	4	6	8	10	12	14	16	18	20	24	26	28	in
DN	50	65	80	100	150	200	250	300	350	400	450	500	600	650	700	mm
ANSI Class 600Lb																
L/L1 (RF/BW)	11.50	13.00	14.00	17.00	22.00	26.00	31.00	33.00	35.00	39.00	43.00	47.00	55.00	57.00	61.00	in.
	292	330	356	432	559	660	787	838	889	991	1092	1194	1397	1448	1549	mm
L2 (RTJ)	11.62	13.12	14.12	17.12	22.12	26.12	31.12	33.12	35.12	39.12	43.12	47.25	55.38	57.50	61.50	in.
	295	333	359	435	562	664	791	841	892	994	1095	1200	1407	1461	1562	mm
H	6.50	7.00	7.88	11.00	12.25	14.00	16.12	18.00	19.25	21.00	24.88	25.62	30.12	31.88	34.62	in.
	165	180	200	280	310	355	410	455	490	535	630	650	765	810	880	mm
W	16	24	24	24	32	32	32	32	32	32	40	40	40	40	40	in.
	400	600	600	600	800	800	800	800	800	800	1000	1000	1000	1000	1000	mm
WT (Kg)	34	53	65	125	245	505	640	910	1380	2250	3400	3850	4900	6700	8300	RF/RTJ
	27	43	49	95	188	418	495	740	1185	1960	3050	3406	4275	6025	7590	BW

Trunnion Mounted

900Lb Forged Steel Ball Valve

Applicable standards:

★APPLICABLE STANDARDS:
★STEEL BALL VALVES, API 608/API 6D
★STEEL BALL VALVES, ISO 14313
★FIRE DURABLE, API 607
★ANTI STATIC, API 608
★STEEL VALVES, ASME B16.34
★FACE TO FACE, ASME B16.10
★END FLANGES, ASME B16.5
★BUTTWELDING ENDS, ASME B16.25
★INSPECTION AND TEST, API 598/ API 6D

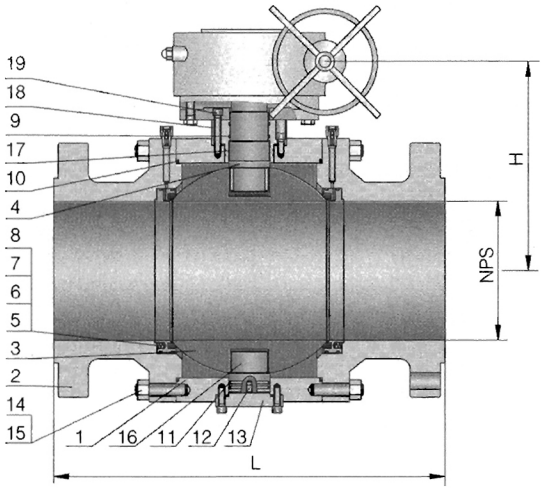

Fig. No:

◎BM9F56FA	BM9F59FL	BM9F56FB
◎BM9B56FA	BM9B59FL	BM9B56FB
◎BM9R56FA	BM9R59FL	BM9R56FB

Materials of parts

NO	Part Name	ASTM Material		
		Carbon Steel	18Cr-9Ni-2Mo	Carbon Steel
1	Body	A105	A182-F316	A350-LF2
2	Bonnet	A105	A182-F316	A350-LF2
3	Ball	A182-F304[1]	A182-F316	A182-F304[1]
4	Stem	A276-304	A276-316	A276-304
5	Seat	A105+ENP	A182-F316	A350-LF2+ENP
6	Seat Insert	Glass Filled PTFE		
7	Seat Spring	A313-304	Inconel X-750	A313-304
8	Seat O-Ring	NBR	Viton	Viton
9	Stem O-Ring	NBR	Viton	Viton
10	Bonnet Gasket	Graphite+304[2]	Graphite+316[2]	Graphite+304[2]
11	Bonnet O-Ring	NBR	Viton	Viton
12	Antistatic Spring	A313-304	A313-316	A313-304
13	Grounding Plunger	A182-F304	A182-F316	A182-F304
14	Bonnet Stud	A193-B7	A193-B8	A320-L7
15	Bonnet Stud Nut	A194-2H	A194-8	A194-4
16	Trunnion	A276-304	A276-316	A276-304
17	Trunnion Bearing	304+PTFE	316+PTFE	304+PTFE
18	Gland	A105	A182-F316	A350-LF2
19	Gland Bolt	A193-B7	A193-B8	A193-B7
20	Stop Plate	Carbon Steel	Carbon Steel+Zn	Carbon Steel
21	Handle	Carbon Steel		

Note: 1). A105+ENP optional.
2). Spiral wound construction.

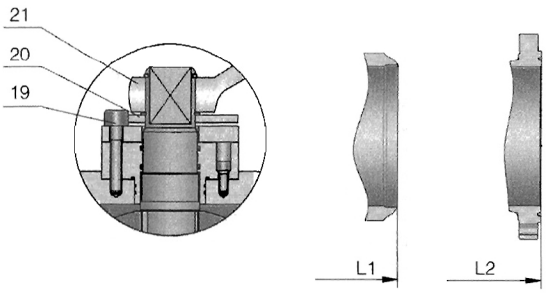

Design description:

▲FULL PORT DESIGN
▲BB, BOLTED BONNET, SPLIT BODY
▲THREE PIECE BODY FOR 12"& ABOVE
▲TRUNNION MOUNTED BALL TYPE
▲BLOW-OUT PROOF STEM
▲FIRE DURABLE CONSTRUCTION
▲ANTI STATIC DEVICE
▲STOPPER DEVICE
▲ISO 5211 MOUNTING PAD
▲FLANGED OR BUTTWELDING ENDS
▲AVAILABLE WITH WG OPERATOR

Dimensions data

NPS DN	2 50	2½ 65	3 80	4 100	6 150	8 200	10 250	12 300	14 350	16 400	18 450	20 500	24 600	in mm
ANSI Class 900Lb														
L/L1 (RF/BW)	14.50	16.50	15.00	18.00	24.00	29.00	33.00	38.00	40.50	44.50	48.00	52.00	61.00	in.
	368	419	381	457	610	737	838	965	1029	1130	1219	1321	1549	mm
L2 (RTJ)	14.62	16.62	15.12	18.12	24.12	29.12	33.12	38.12	40.88	44.88	48.50	52.50	61.75	in.
	371	422	384	460	613	740	841	968	1038	1140	1232	1334	1568	mm
H	6.72	7.50	8.25	11.38	12.62	15.38	17.00	18.50	20.88	24.00	26.00	27.50	30.75	in.
	170	190	210	290	320	390	430	470	530	610	660	700	780	mm
W	24	24	24	32	32	32	32	32	32	40	40	40	40	in.
	600	600	600	800	800	800	800	800	800	1000	1000	1000	1000	mm
WT (Kg)	45	65	73	135	360	650	930	1350	1890	3100	4300	4950	7100	RF/RTJ
	37	53	56	98	291	545	760	1145	1650	2750	3875	4410	6485	BW

Trunnion Mounted
Forged Steel Ball Valve 1500Lb/2500Lb

Applicable standards:

★STEEL BALL VALVES, API 608/API 6D
★STEEL BALL VALVES, ISO 14313
★FIRE DURABLE, API 607
★ANTI STATIC, API 608
★STEEL VALVES, ASME B16.34
★FACE TO FACE, ASME B16.10
★END FLANGES, ASME B16.5
★BUTTWELDING ENDS, ASME B16.25
★INSPECTION AND TEST, API 598/ API 6D

Fig. No:

◎BM15F56FA BM15F59FL BM15F56FB ◎BM25F56FA BM25F59FL BM25F56FB
◎BM15B56FA BM15B59FL BM15B56FB ◎BM25B56FA BM25B59FL BM25B56FB
◎BM15R56FA BM15R59FL BM15R56FB ◎BM25R56FA BM25R59FL BM25R56FB

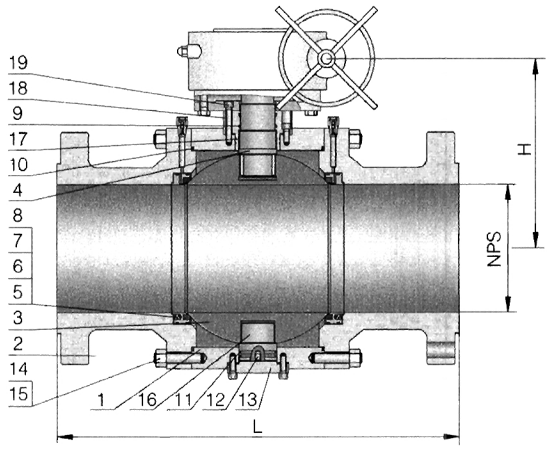

Materials of parts

NO	Part Name	ASTM Material		
		Carbon Steel	18Cr-9Ni-2Mo	Carbon Steel
1	Body	A105	A182-F316	A350-LF2
2	Bonnet	A105	A182-F316	A350-LF2
3	Ball	A182-F304[1]	A182-F316	A182-F304[1]
4	Stem	A276-304	A276-316	A276-304
5	Seat	A105+ENP	A182-F316	A350-LF2+ENP
6	Seat Insert	Glass Filled PTFE		
7	Seat Spring	A313-304	Inconel X-750	A313-304
8	Seat O-Ring	NBR	Viton	Viton
9	Stem O-Ring	NBR	Viton	Viton
10	Bonnet Gasket	Graphite+304[2]	Graphite+316[2]	Graphite+304[2]
11	Bonnet O-Ring	NBR	Viton	Viton
12	Antistatic Spring	A313-304	A313-316	A313-304
13	Grounding Plunger	A182-F304	A182-F316	A182-F304
14	Bonnet Stud	A193-B7	A193-B8	A320-L7
15	Bonnet Stud Nut	A194-2H	A194-8	A194-4
16	Trunnion	A276-304	A276-316	A276-304
17	Trunnion Bearing	304+PTFE	316+PTFE	304+PTFE
18	Gland	A105	A182-F316	A350-LF2
19	Gland Bolt	A193-B7	A193-B8	A193-B7
20	Stop Plate	Carbon Steel	Carbon Steel+Zn	Carbon Steel
21	Handle	Carbon Steel		

Note: 1). A105+ENP optional.
2). Spiral wound construction.

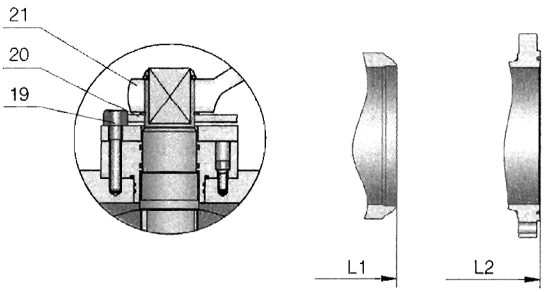

Design description:

▲FULL PORT DESIGN
▲BB, BOLTED BONNET, SPLIT BODY
▲THREE PIECE BODY FOR 12"& ABOVE
▲TRUNNION MOUNTED BALL TYPE
▲BLOW-OUT PROOF STEM
▲FIRE DURABLE CONSTRUCTION
▲ANTI STATIC DEVICE
▲STOPPER DEVICE
▲ISO 5211 MOUNTING PAD
▲FLANGED OR BUTTWELDING ENDS
▲AVAILABLE WITH WG OPERATOR

Dimensions data

NPS	DN	L/L1 (RF/BW)		L2 (RTJ)		H		W		WT (Kg)		L/L1 (RF/BW)		L2 (RTJ)		H		W		WT (Kg)	
		ANSI Class 1500Lb										ANSI Class 2500Lb									
2	50	14.50	368	14.62	371	6.75	170	24	600	55	40	17.75	451	17.88	454	7.50	190	24	600	68	54
2½	65	16.50	419	16.62	422	7.50	190	24	600	75	55	20.00	508	21.25	540	9.00	230	32	800	95	74
3	80	18.50	470	18.62	473	8.25	210	32	800	95	65	22.75	578	23.00	584	11.00	280	32	800	120	91
4	100	21.50	546	21.62	549	11.38	290	32	800	150	115	26.50	673	26.88	683	14.12	360	32	800	185	122
6	150	27.75	705	28.00	711	13.00	330	32	800	540	420	36.00	914	36.50	927	15.75	400	32	800	675	555
8	200	32.75	832	33.12	841	15.75	400	32	800	880	685	40.25	1022	40.88	1038	18.88	480	40	1000	1100	918
10	250	39.00	991	39.38	1000	17.38	440	32	800	1360	1025	50.00	1270	50.88	1292	20.50	520	40	1000	1650	1355
12	300	44.50	1130	45.12	1146	22.00	560	40	1000	1980	1555	56.00	1422	56.88	1445	26.38	670	40	1000	2300	1950
14	350	49.50	1257	50.25	1276	25.25	640	40	1000	3100	2600	–	–	–	–	–	–	–	–	–	–
16	400	54.50	1384	55.38	1407	27.12	690	40	1000	4650	3930	–	–	–	–	–	–	–	–	–	–
in.	mm	in.	mm	in.	mm	in.	mm	in.	mm	RF/RTJ	BW	in.	mm	in.	mm	in.	mm	in.	mm	RF/RTJ	BW

Swing Check Valve, BB, CS

Design

PASCO cast steel check valve are designed and manufactured to provide maximum service life and dependability. All check valves are meet the design requirements of American Petroleum Institute Standard API 600 & API 6D, BS EN 13709 and generally conform to American Society of Mechanical Engineers standard ASME B16.34. Valves are available in a complete range of body/bonnet materials and trims.

Range of Materials

Standard body/bonnet materials include nine grades of carbon, low alloy and stainless steels. For special apolications they can be supplied in other grades of alloy and stainless steell. There's a full range of trim materials to match any service. Optional packing and gasket materials are available for a full range of service conditions.

Available Modifications for PASCO Cast Steel Valves

* Trim Changes
* End Connection Modifications
* Gasket Changes
* Outside Lever and Weight
* Slam Retarders
* Pressure Equalizing
* Outside Lever and Weight
* Customer Specified Coatings
* Weld End Bore Changes
* Oxygen & Chlorine Cleaning & Packaging

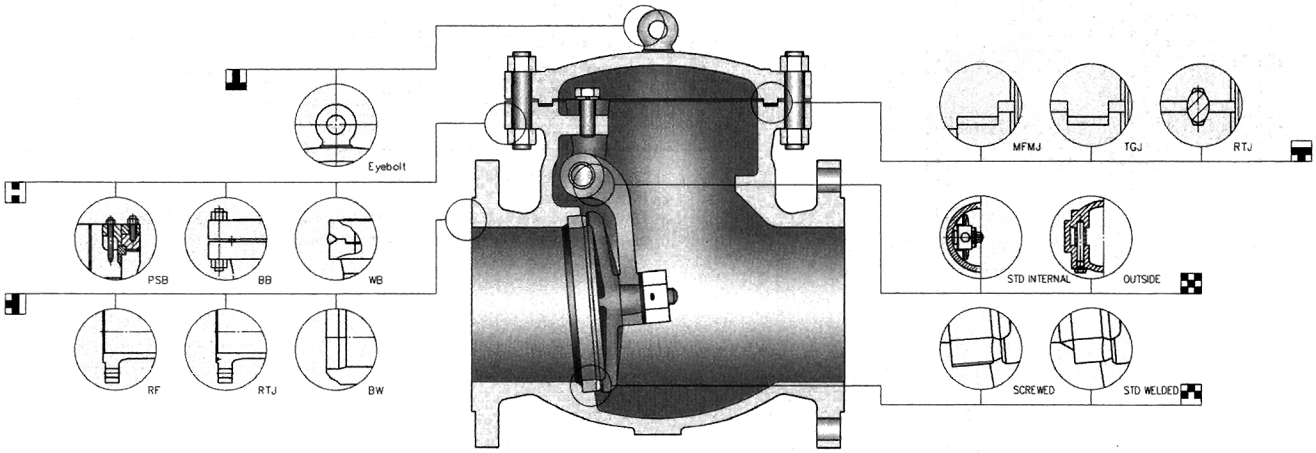

Eyebolt

For 150Lb–8", 300Lb–8", 600Lb–6", 900Lb / 1500Lb / 2500Lb–4" & Over.

End Connections

A choice of Flanged , RTJ flanged or Buttwelding end for piping flexibility.

Outside Lever and Weight

All external hinge pin swing check valves 12" and smaller are available , with an optional outside lever and weight. Internal hinge available with all swing check valves.

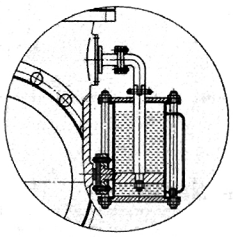

BB

Bolted bonnet. Welding bonnet and pressure seal bonnet in services requiring frequent cycling or with high pressure / temperature variations.

Body-to-Bonnet Joint

A Male and Female joint or Tongue and Groove joint is used 150Lb to 600Lb valves. Ring joint is used in the body to bonnet connection in 900Lb & higher rated valves.

Seat Rings

Separate heavy duty, full ported rings for easy maintenance. Screwed or welded connection into body.

HCU Weighted Mechanical Accumulator

This design can be used to either dampen or assisist closing of the check valve disc depending on orientation. By using the Hydraulic Control Unit to buffer action the disc, the valve opens at lower flow rates.

Swing
Cast Steel Check Valve 150Lb

Applicable standards:

★STEEL CHECK VALVES, API 6D
★STEEL CHECK VALVES, ISO 14313
★STEEL VALVES, ASME B16.34
★FACE TO FACE, ASME B16.10
★END FLANGES, ASME B16.5
★BUTTWELDING ENDS, ASME B16.25
★INSPECTION AND TEST, API 598/ API 6D

Fig. No:

◎C1F01A C1F05D C1F01B
◎C1B01A C1B05D C1B01B

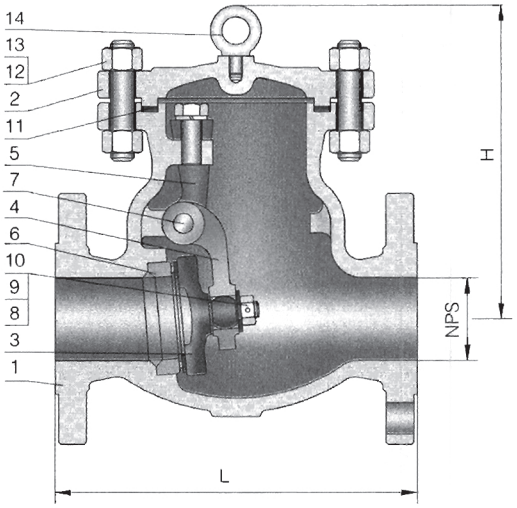

Materials of parts

NO	Part Name	ASTM Material		
		Carbon Steel	$1^1/_4$Cr–$^1/_2$Mo	Carbon Steel
1	Body	A216–WCB	A217–WC6	A352–LCB
2	Bonnet Cap	A216–WCB	A217–WC6	A352–LCB
3	Disc[1]	A105+CR13	A182–F11+HF	A350–LF2+CR13
4	Hinge	A216–WCB	A217–WC6	A352–LCB
5	Support	A216–WCB	A217–WC6	A352–LCB
6	Seat Ring	A105+CR13	A182–F11+HF	A350–LF2+CR13
7	Hinge Pin	A276–420	A276–304	A276–420
8	Disc Washer	Carbon Steel	A276–304	Carbon Steel
9	Disc Nut	Carbon Steel	A194–7	Carbon Steel
10	Disc Nut Pin	Carbon Steel	A276–420	Carbon Steel
11	Bonnet Gasket	Spiral Wound (Graphite+304)		
12	Bonnet Stud	A193–B7	A193–B16	A320–L7
13	Bonnet Stud Nut	A194–2H	A194–7	A194–4
14	Eyebolt[2]	Carbon Steel		

Note. 1). Cast steel disc for NPS 4" and above.
2) NPS 6" & larger.
3). Disc and seat ring may either be solid facing material or a base material equal to or better than the body/bonnet material with facing as shown.

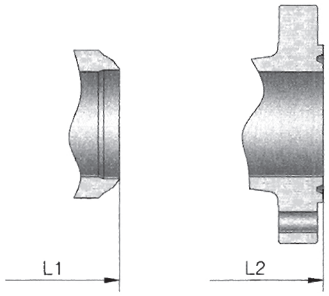

Design description:

▲BB, BOLTED BONNET CAP
▲SWING TYPE, ANTI–ROTATION DISC
▲RENEWABLE SEAT RINGS
▲NON–PENETRATE DISC SHAFT
▲HORIZONTAL OR VERTICAL SERVICE
▲FLANGED OR BUTTWELDING ENDS

Dimensions data

NPS DN	2 50	2½ 65	3 80	4 100	6 150	8 200	10 250	12 300	14 350	16 400	18 450	20 500	24 600	26 650	28 700	30 750	36 900	in mm
ANSI Class 150Lb																		
L/L1 (RF/BW)	8.00	8.50	9.50	11.50	14.00	19.50	24.50	27.50	31.00	34.00	38.50	38.50	51.00	51.00	57.00	60.00	77.00	In.
	203	216	241	292	356	495	622	699	787	864	978	978	1295	1295	1448	1524	1956	mm
L2 (RTJ)	8.50	9.00	10.00	12.00	14.50	20.00	25.00	28.00	31.50	34.50	39.00	39.00	51.50	–	–	–	–	in.
	216	229	254	305	368	508	635	711	800	876	991	991	1308	–	–	–	–	mm
H	6.00	6.50	6.88	8.00	11.50	13.88	15.38	17.00	18.75	20.62	22.88	24.62	34.75	35.88	37.00	38.62	48.00	in.
	152	165	175	204	293	353	390	432	475	525	582	627	883	910	940	980	1220	mm
WT (Kg)	14	20	25	40	71	118	177	263	353	542	632	855	970	1275	1600	1990	2760	RF/RTJ
	10	12	17	29	57	96	143	227	295	468	552	755	831	1120	1420	1760	2230	BW

Swing

300Lb Cast Steel Check Valve

Applicable standards:

★STEEL CHECK VALVES, API 6D
★STEEL CHECK VALVES, ISO 14313
★STEEL VALVES, ASME B16.34
★FACE TO FACE, ASME B16.10
★END FLANGES, ASME B16.5
★BUTTWELDING ENDS, ASME B16.25
★INSPECTION AND TEST, API 598/ API 6D

Fig. No:

◎C3F01A	C3F05D	C3F01B
◎C3B01A	C3B05D	C3B01B
◎C3R01A	C3R05D	C3R01B

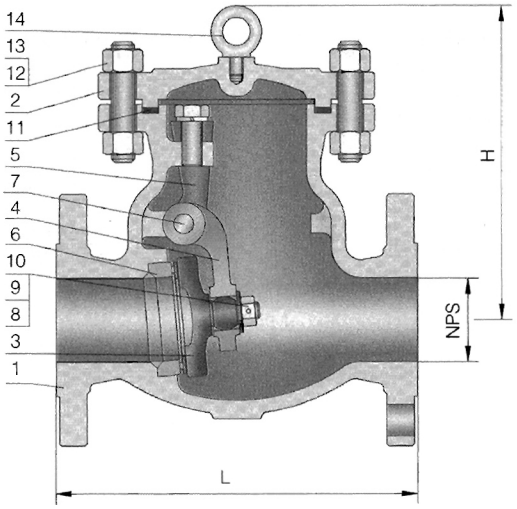

Materials of parts

NO	Part Name	ASTM Material		
		Carbon Steel	$1^1/_4$Cr–$^1/_2$Mo	Carbon Steel
1	Body	A216–WCB	A217–WC6	A352–LCB
2	Bonnet Cap	A216–WCB	A217–WC6	A352–LCB
3	Disc[1]	A105+CR13	A182–F11+HF	A350–LF2+CR13
4	Hinge	A216–WCB	A217–WC6	A352–LCB
5	Support	A216–WCB	A217–WC6	A352–LCB
6	Seat Ring	A105+CR13	A182–F11+HF	A350–LF2+CR13
7	Hinge Pin	A276–420	A276–304	A276–420
8	Disc Washer	Carbon Steel	A276–304	Carbon Steel
9	Disc Nut	Carbon Steel	A194–7	Carbon Steel
10	Disc Nut Pin	Carbon Steel	A276–420	Carbon Steel
11	Bonnet Gasket	Spiral Wound (Graphite+304)		
12	Bonnet Stud	A193–B7	A193–B16	A320–L7
13	Bonnet Stud Nut	A194–2H	A194–7	A194–4
14	Eyebolt[2]	Carbon Steel		

Note: 1). Cast steel disc for NPS 4" and above.
2) NPS 6" & larger.
3) Disc and seat ring may either be solid facing material or a base material equal to or better than the body/bonnet material with facing as shown.

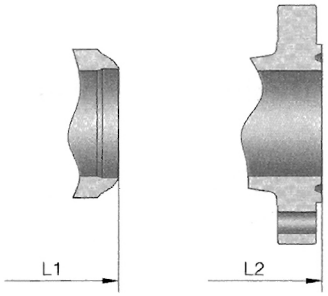

Design description:

▲BB, BOLTED BONNET CAP
▲SWING TYPE, ANTI–ROTATION DISC
▲RENEWABLE SEAT RINGS
▲NON–PENETRATE DISC SHAFT
▲HORIZONTAL OR VERTICAL SERVICE
▲FLANGED OR BUTTWELDING ENDS

Dimensions data

NPS / DN	2 / 50	2½ / 65	3 / 80	4 / 100	6 / 150	8 / 200	10 / 250	12 / 300	14 / 350	16 / 400	18 / 450	20 / 500	24 / 600	26 / 650	28 / 700	30 / 750	36 / 900	in / mm
ANSI Class 300Lb																		
L/L1 (RF/BW)	10.50	11.50	12.50	14.00	17.50	21.00	24.50	28.00	33.00	34.00	38.50	40.00	53.00	53.00	59.00	62.75	82.00	In.
	267	292	318	356	445	533	622	711	838	864	978	1016	1346	1346	1499	1594	2083	mm
L2 (RTJ)	11.12	12.12	13.12	14.62	18.12	21.62	25.12	28.62	33.62	34.62	39.12	40.75	53.88	54.00	60.00	63.75	–	in.
	283	308	333	371	460	549	638	727	854	879	994	1035	1368	1372	1524	1619	–	mm
H	6.00	6.50	6.88	8.00	11.50	13.88	15.38	17.00	18.75	20.62	22.88	24.62	34.75	35.88	37.00	38.62	48.00	in.
	152	165	175	204	292	353	390	432	475	525	582	627	883	910	940	980	1220	mm
WT (Kg)	16	23	29	46	82	136	204	302	405	625	730	985	1115	1465	1840	2290	3180	RF/RTJ
	11	13	18	31	61	103	155	245	315	503	593	812	895	1205	1525	1895	2395	BW

Swing
Cast Steel Check Valve 600Lb

Applicable standards:

★STEEL CHECK VALVES, API 6D
★STEEL CHECK VALVES, ISO 14313
★STEEL VALVES, ASME B16.34
★FACE TO FACE, ASME B16.10
★END FLANGES, ASME B16.5
★BUTTWELDING ENDS, ASME B16.25
★INSPECTION AND TEST, API 598/ API 6D

Fig. No:

◎C6F01A	C6F05D	C6F01B
◎C6B01A	C6B05D	C6B01B
◎C6R01A	C6R05D	C6R01B

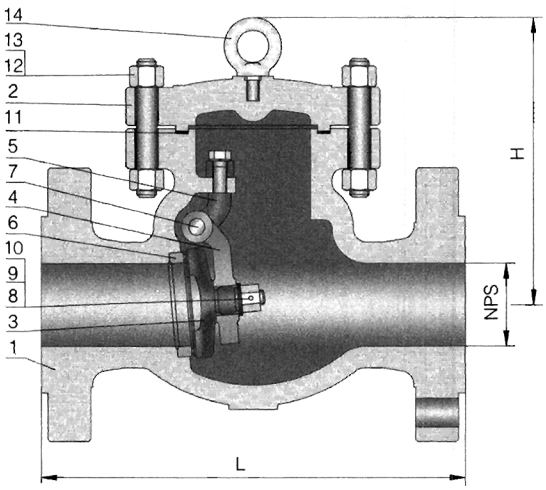

Materials of parts

NO	Part Name	ASTM Material		
		Carbon Steel	$1^1/_4$Cr-$^1/_2$Mo	Carbon Steel
1	Body	A216-WCB	A217-WC6	A352-LCB
2	Bonnet Cap	A216-WCB	A217-WC6	A352-LCB
3	Disc[1]	A216-WCB+CR13	A217-WC6+HF	A352-LCB+CR13
4	Hinge	A216-WCB	A217-WC6	A352-LCB
5	Support	A216-WCB	A217-WC6	A352-LCB
6	Seat Ring	A105+CR13	A182-F11+HF	A350-LF2+CR13
7	Hinge Pin	A276-420	A276-304	A276-420
8	Disc Washer	Carbon Steel	A276-304	Carbon Steel
9	Disc Nut	Carbon Steel	A194-7	Carbon Steel
10	Disc Nut Pin	Carbon Steel	A276-420	Carbon Steel
11	Bonnet Gasket	Spiral Wound (Graphite+304)		
12	Bonnet Stud	A193-B7	A193-B16	A320-L7
13	Bonnet Stud Nut	A194-2H	A194-7	A194-4
14	Eyebolt[1]	Carbon Steel		

Note: 1). NPS 6" & larger.
2). Disc and seat ring may either be solid facing material or a base material equal to or better than the body/bonnet material with facing as shown

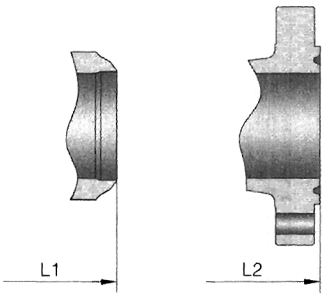

Design description:

▲BB, BOLTED BONNET CAP
▲SWING TYPE, ANTI-ROTATION DISC
▲RENEWABLE SEAT RINGS
▲NON-PENETRATE DISC SHAFT
▲HORIZONTAL OR VERTICAL SERVICE
▲FLANGED OR BUTTWELDING ENDS

Dimensions data

NPS / DN	2 / 50	2½ / 65	3 / 80	4 / 100	6 / 150	8 / 200	10 / 250	12 / 300	14 / 350	16 / 400	18 / 450	20 / 500	24 / 600	in / mm
ANSI Class 600Lb														
L/L1 (RF/BW)	11.50	13.00	14.00	17.00	22.00	26.00	31.00	33.00	35.00	39.00	43.00	47.00	55.00	In.
	292	330	356	432	559	660	787	838	889	991	1092	1194	1397	mm
L2 (RTJ)	11.62	13.12	14.12	17.12	22.12	26.12	31.12	33.12	35.12	39.12	43.12	47.25	55.38	in.
	295	333	359	435	562	664	791	841	892	994	1095	1200	1407	mm
H	7.50	8.00	8.75	10.00	14.50	17.50	19.25	21.38	23.38	25.75	28.75	31.00	43.50	in.
	190	205	222	255	368	445	490	540	595	655	730	785	1105	mm
WT (Kg)	24	35	44	70	125	207	310	460	615	945	1105	1495	1695	RF/RTJ
	16	19	26	44	87	147	220	350	452	720	845	1160	1280	BW`

Swing

900Lb Cast Steel Check Valve

Applicable standards:

★STEEL CHECK VALVES, API 6D
★STEEL CHECK VALVES, ISO 14313
★STEEL VALVES, ASME B16.34
★FACE TO FACE, ASME B16.10
★END FLANGES, ASME B16.5
★BUTTWELDING ENDS, ASME B16.25
★INSPECTION AND TEST, API 598/ API 6D

Fig. No:

◎C9F05A C9F05D C9F05B
◎C9B05A C9B05D C9B05B
◎C9R05A C9R05D C9R05B

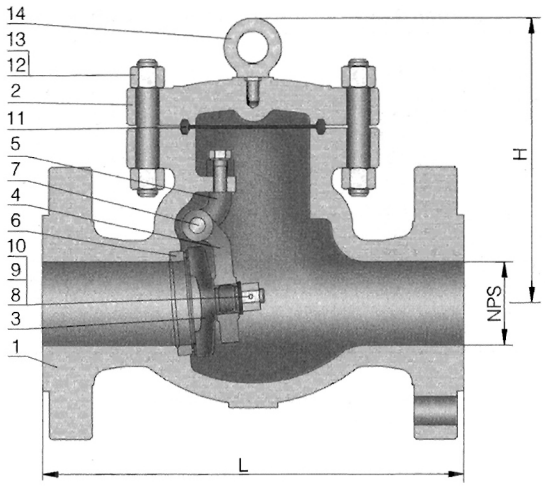

Materials of parts

NO	Part Name	ASTM Material		
		Carbon Steel	$1^1/_4$Cr–$^1/_2$Mo	Carbon Steel
1	Body	A216–WCB	A217–WC6	A352–LCB
2	Bonnet Cap	A216–WCB	A217–WC6	A352–LCB
3	Disc[1)]	A216–WCB+Cr13	A217–WC6+HF	A352–LCB+CR13
4	Hinge	A216–WCB	A217–WC6	A352–LCB
5	Support	A216–WCB	A217–WC6	A352–LCB
6	Seat Ring	A105+HF	A182–F11+HF	A350–LF2+HF
7	Hinge Pin	A276–420	A276–304	A276–420
8	Disc Washer	Carbon Steel	A276–304	Carbon Steel
9	Disc Nut	Carbon Steel	A194–7	Carbon Steel
10	Disc Nut Pin	Carbon Steel	A276–420	Carbon Steel
11	Bonnet Gasket	Steel Ring	304SS Ring	Steel Ring
12	Bonnet Stud	A193–B7	A193–B16	A320–L7
13	Bonnet Stud Nut	A194–2H	A194–7	A194–4
14	Eyebolt[1)]	Carbon Steel		

Note: 1). NPS 6" & larger
2) Disc and seat ring may either be solid facing material or a base material equal to or better than the body/bonnet material with facing as shown.

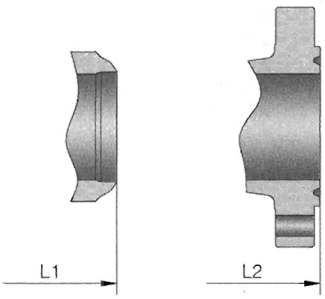

Design description:

▲BB, BOLTED BONNET CAP
▲SWING TYPE, ANTI–ROTATION DISC
▲RENEWABLE SEAT RINGS
▲NON–PENETRATE DISC SHAFT
▲HORIZONTAL OR VERTICAL SERVICE
▲FLANGED OR BUTTWELDING ENDS

Dimensions data

NPS DN	2 50	2½ 65	3 80	4 100	6 150	8 200	10 250	12 300	14 350	16 400	18 450	20 500	24 600	in mm
ANSI Class 900Lb														
L/L1 (RF/BW)	14.50	16.50	15.00	18.00	24.00	29.00	33.00	38.00	40.50	44.50	48.00	52.00	–	in.
	368	419	381	457	610	737	838	965	1029	1130	1219	1321	–	mm
L2 (RTJ)	14.62	16.62	15.12	18.12	24.12	29.12	33.12	38.12	40.88	44.88	48.50	52.50	–	in.
	371	422	384	460	613	740	841	968	1038	1140	1232	1334	–	mm
H	9.50	10.00	11.00	12.50	18.12	22.00	24.00	26.50	29.38	32.00	33.50	38.75	–	in.
	240	256	278	320	460	560	610	675	745	815	850	985	–	mm
WT (Kg)	37	54	68	109	195	321	481	711	956	1468	1870	2316	–	RF/RTJ
	21	25	34	58	115	194	290	461	597	950	1210	1533	–	BW

Swing
Cast Steel Check Valve 1500Lb/2500Lb

Applicable standards:

★STEEL CHECK VALVES, API 6D
★STEEL CHECK VALVES, ISO 14313
★STEEL VALVES, ASME B16.34
★FACE TO FACE, ASME B16.10
★END FLANGES, ASME B16.5
★BUTTWELDING ENDS, ASME B16.25
★INSPECTION AND TEST, API 598/ API 6D

Fig. No:

◎C15F05A	C15F05D	C15F05B	◎C25F05A	C25F05D	C25F05B
◎C15B05A	C15B05D	C15B05B	◎C25B05A	C25B05D	C25B05B
◎C15R05A	C15R05D	C15R05B	◎C25R05A	C25R05D	C25R05B

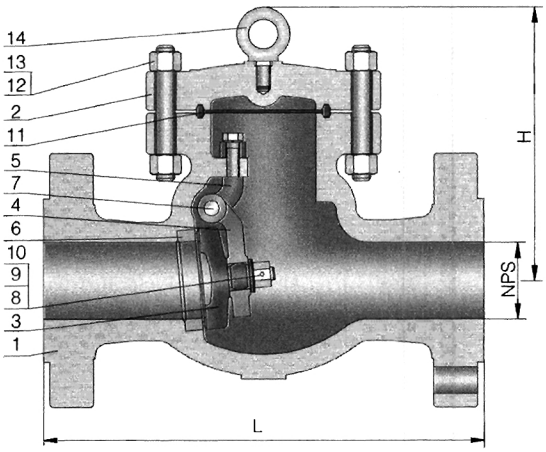

Materials of parts

NO	Part Name	ASTM Material		
		Carbon Steel	1¼Cr-½Mo	Carbon Steel
1	Body	A216-WCB	A217-WC6	A352-LCB
2	Bonnet Cap	A216-WCB	A217-WC6	A352-LCB
3	Disc[1]	A216-WCB+CR13	A217-WC6+HF	A352-LCB+CR13
4	Hinge	A216-WCB	A217-WC6	A352-LCB
5	Support	A216-WCB	A217-WC6	A352-LCB
6	Seat Ring	A105+HF	A182-F11+HF	A350-LF2+HF
7	Hinge Pin	A276-420	A276-304	A276-420
8	Disc Washer	Carbon Steel	A276-304	Carbon Steel
9	Disc Nut	Carbon Steel	A194-7	Carbon Steel
10	Disc Nut Pin	Carbon Steel	A276-420	Carbon Steel
11	Bonnet Gasket	Steel Ring	304SS Ring	Steel Ring
12	Bonnet Stud	A193-B7	A193-B16	A320-L7
13	Bonnet Stud Nut	A194-2H	A194-7	A194-4
14	Eyebolt[1]	Carbon Steel		

Note: 1) NPS 6" & larger.
2). Disc and seat ring may either be solid facing material or a base material equal to or better than the body/bonnet material with facing as shown.

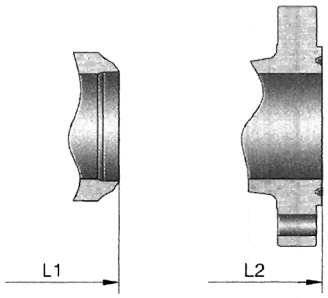

Design description:

▲BB, BOLTED BONNET CAP
▲SWING TYPE, ANTI-ROTATION DISC
▲RENEWABLE SEAT RINGS
▲NON-PENETRATE DISC SHAFT
▲HORIZONTAL OR VERTICAL SERVICE
▲FLANGED OR BUTTWELDING ENDS

Dimensions data

NPS	DN	L/L1 (RF/BW)		L2 (RTJ)		H		WT (Kg)		L/L1 (RF/BW)		L2 (RTJ)		H		WT (Kg)	
		ANSI Class 1500Lb								ANSI Class 2500Lb							
2	50	14.50	368	14.62	371	9.50	240	40	29	17.75	451	17.88	454	10.75	275	50	35
2½	65	16.50	419	16.62	422	10.00	256	63	47	20.00	508	20.25	514	13.25	335	76	55
3	80	18.50	470	18.62	473	13.00	330	70	49	22.75	578	23.00	584	13.75	350	85	68
4	100	21.50	546	21.62	549	14.75	375	115	84	26.50	673	26.88	683	15.12	385	165	115
6	150	27.75	705	28.00	711	18.88	480	250	152	36.00	914	36.50	927	19.50	495	460	225
8	200	32.75	832	33.12	841	23.50	595	470	310	40.25	1022	40.88	1038	24.62	625	900	580
10	250	39.00	991	39.38	1000	26.00	660	740	470	50.00	1270	50.88	1292	28.00	712	1300	860
12	300	44.50	1130	45.12	1146	29.12	740	1100	710	56.00	1422	56.88	1445	35.62	905	1800	1150
14	350	49.50	1257	50.25	1276	30.88	785	1410	910	–	–	–	–	–	–	–	–
16	400	54.50	1384	55.38	1407	32.88	835	1600	1100	–	–	–	–	–	–	–	–
in.	mm	in.	mm	in.	mm	in.	mm	RF/RTJ	BW	in.	mm	in.	mm	in.	mm	RF/RTJ	BW

800Lb Compact Steel Check Valve

Applicable standards:

★STEEL CHECK VALVES, API 602
★STEEL VALVES, ASME B16.34
★FACE TO FACE, MANUFACTURER STANDARD
★FACE TO FACE, FLANGED, ASME B16.10
★END FLANGES, ASME B16.5
★BUTTWELDING ENDS, ASME B16.25
★SOCKET-WELDING ENDS, ASME B16.11
★SCREWED ENDS, ASME B1.20.1
★INSPECTION AND TEST, API 598

Fig. No:

SWING

○C8F01FA	C8B01FA	C8S01FA	C8T01FA
○C8F01FD	C8B01FD	C8S01FD	C8T01FD
○C8F01FN	C8B01FN	C8S01FN	C8T01FN

LIFT

○CL8F01FA	CL8B01FA	CL8S01FA	CL8T01FA
○CL8F01FD	CL8B01FD	CL8S01FD	CL8T01FD
○CL8F01FN	CL8B01FN	CL8S01FN	CL8T01FN

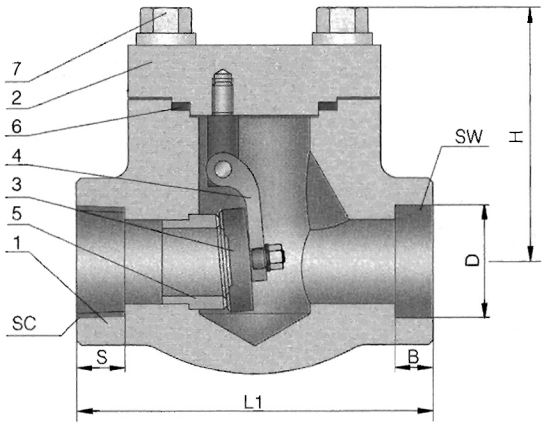

Materials of parts

NO	Part Name	ASTM Material C-Si	16Cr-12Ni-2Mo	$1^1/_4$Cr-$^1/_2$Mo-Si
1	Body	A105	A182-F316	A182-F11
2	Bonnet	A105	A182-F316	A182-F11
3	Disc	A182-F6a	A182-F316	A182-F6a+HF
4	Hinge	A276-410	A276-316	A276-410
5	Seat1)	A276-410	A182-F316+HF	A276-410+HF
6	Bonnet Gasket[2]	Graphite+304	Graphite+316	Graphite+304
7	Bonnet Stud	A193-B7	A193-B8M	A193-B16

Note: 1). Lift type check valve seat ring integral with body.
2). Spiral wound construction.

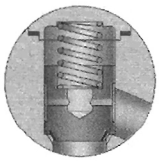

Lift Type

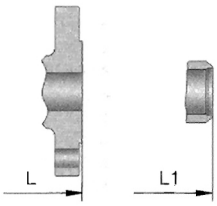

150-600Lb

Design description:

▲BOLTED BONNET CAP
▲CHOICE OF WB, WELDING BONNET
▲LIFT OR SWING TYPE
▲SEAT RINGS INTEGRAL WITH BODY OF LIFT
▲HORIZONTAL OR VERTICAL SERVICE
▲SOCKET WELD ENDS
▲SW, SOCKET-WELDING ENDS
▲SC, SCREWED ENDS
▲BW, BUTTWELDING ENDS
▲FLANGED ENDS

Dimensions data

NPS DN	Unit	L1[1]	L (Flanged Ends) 150Lb	300Lb	600Lb	d	SW D	SW B	SC NPT	SC S	H	WT[2] (Kg)
3/8	in.	3.12	4.00	6.00	6.50	0.354	0.693	0.378	3/8	0.540	2.40	3.8/2.8
10	mm	79	102	152	165	9	17.6	9.6		13.6	61	
1/2	in.	3.12	4.25	6.00	6.50	0.354	0.858	0.378	1/2	0.535	2.40	5.6/3.4
15	mm	79	108	152	165	10	21.8	9.6		13.6	61	
3/4	in.	3.62	4.62	7.00	7.50	0.512	1.067	0.500	3/4	0.547	2.40	7.8/4.7
20	mm	92	117	178	190	13	27.1	12.7		13.9	61	
1	in.	4.38	5.00	8.00	8.50	0.689	1.331	0.500	1	0.681	3.07	12.5/9.2
25	mm	111	127	203	216	17.5	33.8	12.7		17.3	78	
1 1/4	in.	4.75	5.50	8.50	9.00	0.906	1.677	0.500	1 1/4	0.709	3.31	17/10.5
32	mm	120	140	216	229	23	42.6	12.7		18	84	
1 1/2	in.	4.75	6.50	9.00	9.50	1.142	1.917	0.500	1 1/2	0.724	10.25	23.5/13.3
40	mm	120	165	229	241	30	48.7	12.7		18.4	3.98	
2	in.	5.50	8.00	10.50	11.50	1.378	2.406	0.626	2	0.756	4.72	38.8/18.9
50	Mm	140	203	267	292	35	61.1	15.9		19.2	120	

NOTES: 1) BW, SW or SC.
2) 600Lb-RF/800Lb-(BW/SW/SC).

Butterfly Dual-plate

150Lb/300Lb Cast Steel Check Valve

Applicable standards:

★STEEL CHECK VALVES, API 594/API 6D
★STEEL CHECK VALVES, ISO 14313
★STEEL VALVES, ASME B16.34
★FACE TO FACE, ASME B16.10
★END FLANGES, ASME B16.5
★INSPECTION AND TEST, API 598/ API 6D

Fig. No:

◎CD1W01A	CD1W05D	CD1W01B	◎CD3W01A	CD3W05D	CD3W01B
◎CD1F01A	CD1F05D	CD1F01B	◎CD3F01A	CD3F05D	CD3F01B

Materials of parts

NO	Part Name	ASTM Material		
		Carbon Steel	18Cr-9Ni-2Mo	Carbon Steel
1	Body	A216-WCB	A351-CF8M	A352-LCB
2	Plate	A216-WCB+CR13	A351-CF8M+HF	A352-LCB+CR13
3	Stop Pin	A276-420	A276-304	A276-420
4	Back Spring	A313-304	A313-316	A313-304
5	Hinge Pin	A276-420	A276-304	A276-420
6	Eyebolt[1]	Carbon Steel		

Note: 1). NPS 8" & larger.

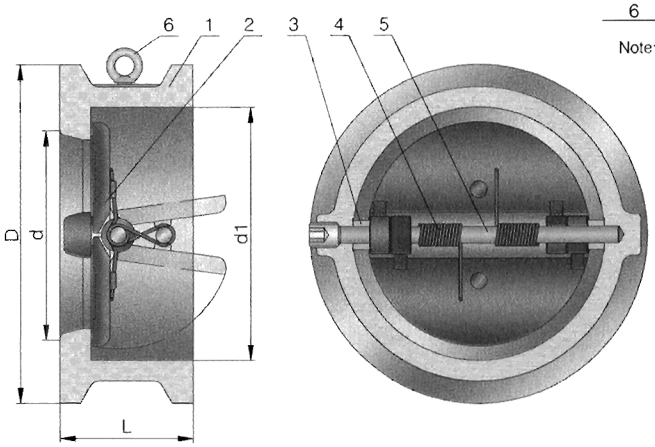

Design description:

▲ONE PIECE BODY
▲BUTTERFLY SWING TYPE
▲DUAL-PLATE DISC, LONG-PATTERN
▲RENEWABLE SPLIT DISC
▲HORIZONTAL OR VERTICAL SERVICE
▲WAFER ENDS
▲AVAILABLE WITH FLANGED ENDS

Dimensions data

NPS DN	2 50	2½ 65	3 80	4 100	6 150	8 200	10 250	12 300	14 350	16 400	18 450	20 500	24 600	in mm
ANSI Class 150Lb														
L	2.38	2.62	2.88	2.88	3.88	5.00	5.75	7.12	7.25	7.50	8.00	8.62	8.75	in.
	60	67	73	73	98	127	146	181	184	191	203	219	222	mm
D	4.00	4.88	5.38	6.75	8.62	10.88	13.25	16.00	17.62	20.12	21.50	23.75	28.12	in.
	103	122	135	173	220	277	337	407	448	512	547	604	715	mm
d	2.00	2.50	3.25	4.00	6.00	8.00	10.00	12.00	13.75	15.75	17.75	19.75	23.62	in.
	51	65	80	102	152	203	254	305	350	400	450	500	600	mm
d1	2.25	2.88	3.50	4.25	6.25	8.25	10.50	12.12	14.00	16.00	18.00	19.88	23.75	in.
	56	73	88	108	160	210	266	310	355	405	455	505	605	mm
WT	2	3	4	6	13	25	39	54	80	117	138	163	331	Kg
ANSI Class 300Lb														
L	2.38	2.62	2.88	2.88	3.88	5.00	5.75	7.12	8.75	9.12	10.38	11.50	12.50	in.
	60	67	73	73	98	127	146	181	222	232	264	292	318	mm
D	4.25	5.00	5.75	7.00	9.88	12.00	14.12	16.50	19.00	21.12	23.38	25.62	30.38	in.
	110	128	147	179	249	305	359	420	483	537	594	652	772	mm
d	2.00	2.50	3.00	4.00	6.00	8.00	10.00	12.00	14.00	16.00	18.00	20.00	24.00	in.
	51	65	80	102	152	203	254	305	350	400	450	500	600	mm
d1	2.25	2.88	3.50	4.25	6.38	8.25	10.50	12.25	14.00	16.00	18.00	20.00	24.00	in.
	58	73	88	108	160	210	266	310	355	405	455	505	608	mm
WT	3	4	6	8	18	31	51	77	117	190	200	265	410	Kg

Butterfly Dual-plate
Cast Steel Check Valve 600Lb/900Lb

PASCO

Applicable standards:

★STEEL CHECK VALVES, API 594/API 6D
★STEEL CHECK VALVES, ISO 14313
★STEEL VALVES, ASME B16.34
★FACE TO FACE, ASME B16 10
★END FLANGES, ASME B16.5
★INSPECTION AND TEST, API 598/ API 6D

Fig. No:

◎CD6W01A CD6W05D CD6W01B
◎CD6F01A CD6F05D CD6F01B

◎CD9W05A CD9W05D CD9W05B
◎CD9F05A CD9F05D CD9F05B

Materials of parts

NO	Part Name	ASTM Material		
		Carbon Steel	18Cr-9Ni-2Mo	Carbon Steel
1	Body	A216-WCB	A351-CF8M	A352-LCB
2	Plate	A216-WCB+CR13	A351-CF8M+HF	A352-LCB+CR13
3	Stop Pin	A276-420	A276-304	A276-420
4	Back Spring	A313-304	A313-316	A313-304
5	Hinge Pin	A276-420	A276-304	A276-420
6	Eyebolt[1)]	Carbon Steel		

Note: 1) NPS 8 & larger

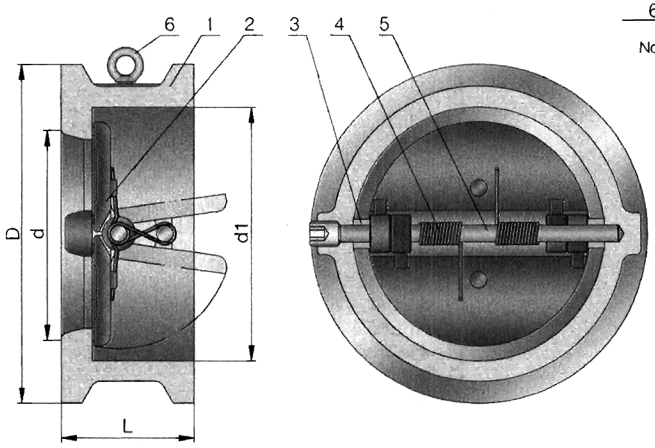

Design description:

▲ONE PIECE BODY
▲BUTTERFLY SWING TYPE
▲DUAL-PLATE DISC, LONG-PATTERN
▲RENEWABLE SPLIT DISC
▲HORIZONTAL OR VERTICAL SERVICE
▲WAFER ENDS
▲AVAILABLE WITH FLANGED ENDS

Dimensions data

NPS	DN	L		D		d		d1		WT	L		D		d		d1		WT
		ANSI Class 600Lb									ANSI Class 900Lb								
2	50	2.38	60	4.38	110	2.00	51	2.25	58	4	2.75	70	5.50	140	2.00	51	2.25	58	8
2½	65	2.62	67	5.00	128	2.50	65	2.88	73	5	3.25	83	6.38	162	2.50	65	2.88	73	11
3	80	2.88	73	5.75	147	3.00	80	3.50	88	8	3.25	83	6.50	165	3.00	80	3.50	88	14
4	100	3.12	79	7.50	191	4.00	102	4.25	108	11	4.00	102	8.00	204	4.00	102	4.25	108	20
6	150	5.38	137	10.38	264	6.00	152	6.38	162	26	6.25	159	11.25	286	6.00	152	6.38	162	42
8	200	6.50	165	12.50	318	7.88	200	8.38	212	55	8.12	206	14.00	356	7.88	200	8.38	212	84
10	250	8.38	213	15.62	398	9.88	250	10.50	266	95	9.50	241	17.00	432	9.88	250	10.50	266	145
12	300	9.00	229	17.88	455	12.00	305	12.25	312	140	11.50	292	19.50	495	12.00	305	12.25	312	220
14	350	10.75	273	19.25	490	13.25	337	14.00	355	223	–	–	–	–	–	–	–	–	–
16	400	12.00	305	22.12	562	15.25	387	15.75	400	360	–	–	–	–	–	–	–	–	–
in.	mm	in.	mm	in.	mm	in.	mm	in.	mm	Kg	in.	mm	in.	mm	in.	mm	in.	mm	Kg

150Lb Cast Stainless Steel Swing Check Valve

Applicable standards:

★STEEL CHECK VALVES, API 603
★STEEL VALVES, ASME B16.34
★FACE TO FACE, ASME B16.10
★END FLANGES, ASME B16.5
★BUTTWELDING ENDS, ASME B16.25
★INSPECTION AND TEST, API 598

Fig. No:

◎C1F02K	C1F10L	C1F10N
◎C1B02K	C1B10L	C1B10N

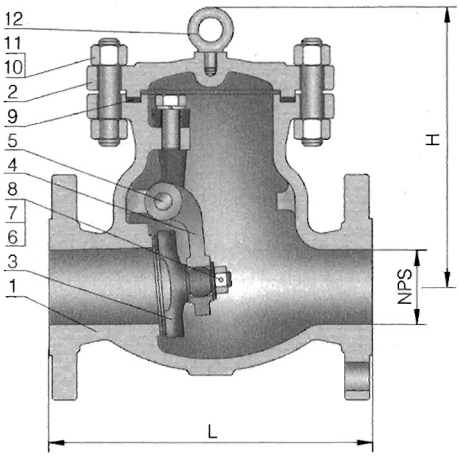

Materials of parts

NO	Part Name	ASTM Material 18Cr-18Ni	18Cr-9Ni-2Mo	17Cr-9Ni-2Mo
1	Body	A351-CF8	A351-CF8M	A351-CF3M
2	Bonnet Cap	A351-CF8	A351-CF8M	A351-CF3M
3	Disc	A351-CF8	A351-CF8M	A351-CF3M
4	Hinge	A351-CF8	A351-CF8M	A351-CF3M
5	Hinge Pin	A276-304	A276-316	A276-316L
6	Disc Washer	A276-304	A276-316	A276-316L
7	Disc Nut	A193-B8	A193-B8M	A193-B8M
8	Disc Nut Pin	A276-304	A276-316	A276-316L
9	Bonnet Gasket[1]	Graphite+304	Graphite+316	Graphite+316L
10	Bonnet Stud	A193-B8	A193-B8M	A193-B8M
11	Bonnet Stud Nut	A194-8	A194-8M	A194-8M
12	Eyebolt[2]	A194-8	A194-8	A194-8

Note 1) Spiral wound construction, Tefon optional.
2) NPS 6" & larger.
3) Disc and seat (Integral with body) may either be solid facing material or a base material equal to or better than the body/bonnet material with facing as shown.

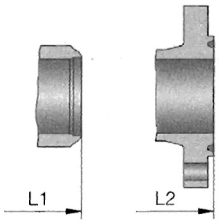

Design description:

▲BB, BOLTED BONNET CAP
▲SWING TYPE, ANTI-ROTATION DISC
▲SEAT RINGS INTEGRAL WITH BODY
▲NON-PENETRATE DISC SHAFT
▲HORIZONTAL OR VERTICAL SERVICE
▲FLANGED OR BUTTWELDING ENDS

Dimensions data

NPS DN	1/2 15	3/4 20	1 25	1½ 40	2 50	2½ 65	3 80	4 100	6 150	8 200	10 250	12 300	14 350	16 400	18 450	20 500	24 600	26 650	in mm
ANSI Class 150Lb																			
L/L1	4.25	4.62	5.00	6.50	8.00	8.50	9.50	11.50	14.00	19.50	24.50	27.50	31.00	34.00	38.50	38.50	51.00	–	in.
(RF/BW)	108	117	127	165	203	216	241	292	356	495	622	699	787	864	978	978	1295	–	mm
L2	–	–	–	–	8.50	9.00	10.00	12.00	14.50	20.00	25.00	28.00	31.50	34.50	39.00	39.00	51.50	–	in.
(RTJ)	–	–	–	–	216	229	254	305	368	508	635	711	800	876	991	991	1308	–	mm
H	3.12	3.38	3.88	4.38	6.00	6.50	6.88	8.00	11.50	13.88	15.38	17.00	18.75	20.62	22.88	24.62	34.75	–	in.
	80	85	100	110	152	165	175	204	293	353	390	432	475	525	582	627	883	–	mm
WT	2.5	3.5	5	7.5	14	20	25	40	71	118	177	263	353	542	632	855	970	–	BW
(Kg)	2	3	3.5	5.5	10	12	17	29	57	96	143	227	295	468	552	755	831	–	RF/RTJ

Cast Stainless Steel Swing Check Valve 300Lb

PASCO

Applicable standards:

★STEEL CHECK VALVES, API 603
★STEEL VALVES, ASME B16.34
★FACE TO FACE, ASME B16.10
★END FLANGES, ASME B16.5
★BUTTWELDING ENDS, ASME B16.25
★INSPECTION AND TEST, API 598

Fig. No:

◎C3F02K	C3F10L	C3F10N
◎C3B02K	C3B10L	C3B10N
◎C3R02K	C3R10L	C3R10N

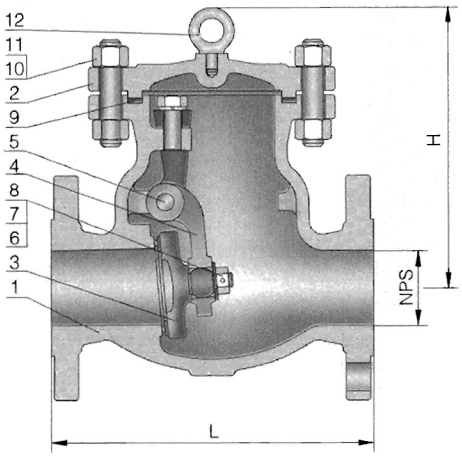

Materials of parts

NO	Part Name	ASTM Material 18Cr-18Ni	18Cr-9Ni-2Mo	17Cr-9Ni-2Mo
1	Body	A351-CF8	A351-CF8M	A351-CF3M
2	Bonnet Cap	A351-CF8	A351-CF8M	A351-CF3M
3	Disc	A351-CF8	A351-CF8M	A351-CF3M
4	Hinge	A351-CF8	A351-CF8M	A351-CF3M
5	Hinge Pin	A276-304	A276-316	A276-316L
6	Disc Washer	A276-304	A276-316	A276-316L
7	Disc Nut	A193-B8	A193-B8M	A193-B8M
8	Disc Nut Pin	A276-304	A276-316	A276-316L
9	Bonnet Gasket[1]	Graphite+304	Graphite+316	Graphite+316L
10	Bonnet Stud	A193-B8	A193-B8M	A193-B8M
11	Bonnet Stud Nut	A194-8	A194-8M	A194-8M
12	Eyebolt[2]	A194-8	A194-8	A194-8

Note: 1) Spiral wound construction, Tefon optional.
2). NPS 6" & larger
3). Disc and seat (Integral with body) may either be solid facing material or a base material equal to or better than the body/bonnet material with facing as shown.

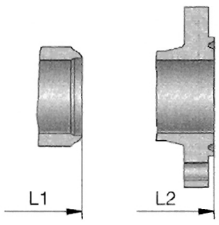

Design description:

▲BB, BOLTED BONNET CAP
▲SWING TYPE, ANTI-ROTATION DISC
▲SEAT RINGS INTEGRAL WITH BODY
▲NON-PENETRATE DISC SHAFT
▲HORIZONTAL OR VERTICAL SERVICE
▲FLANGED OR BUTTWELDING ENDS

Dimensions data

NPS DN	1/2 15	3/4 20	1 25	1½ 40	2 50	2½ 65	3 80	4 100	6 150	8 200	10 250	12 300	14 350	16 400	18 450	20 500	24 600	26 650	in mm
ANSI Class 300Lb																			
L/L1	6.00	7.00	8.00	9.00	10.50	11.50	12.50	14.00	17.50	21.00	24.50	28.00	33.00	34.00	38.50	40.00	53.00	–	in.
(RF/BW)	152	178	203	229	267	292	318	356	445	533	622	711	838	864	978	1016	1346	–	mm
L2	–	–	–	–	11.12	12.12	13.12	14.62	18.12	21.62	25.12	28.62	33.62	34.62	39.12	40.75	53.88	–	in.
(RTJ)	–	–	–	–	283	308	333	371	460	549	638	727	854	879	994	1035	1368	–	mm
H	3.12	3.38	3.88	4.38	6.00	6.50	6.88	8.00	11.50	13.88	15.38	17.00	18.75	20.62	22.88	24.62	34.75	–	in.
	80	85	100	110	152	165	175	204	293	353	390	432	475	525	582	627	883	–	mm
WT	3	4	6	10	16	23	29	46	82	136	204	302	405	625	730	985	1115	–	BW
(Kg)	2.5	3.5	5	7	11	13	18	31	61	103	155	245	315	503	593	812	895	–	RF/RTJ

600Lb Cast Stainless Steel Swing Check Valve

Applicable standards:

★STEEL CHECK VALVES, API 603
★STEEL VALVES, ASME B16.34
★FACE TO FACE, ASME B16.10
★END FLANGES, ASME B16.5
★BUTTWELDING ENDS, ASME B16.25
★INSPECTION AND TEST, API 598

Fig. No:

◎C6F05K	C6F12L	C6F12N
◎C6B05K	C6B12L	C6B12N
◎C6R05K	C6R12L	C6R12N

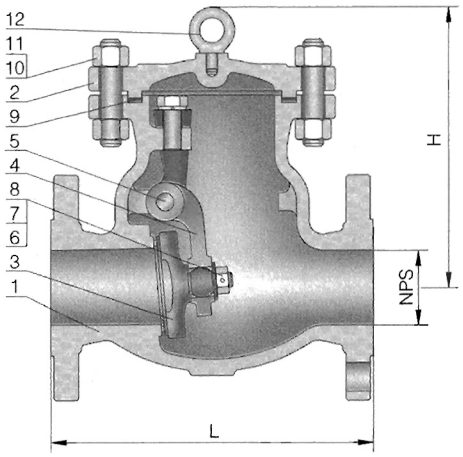

Materials of parts

NO	Part Name	ASTM Material 18Cr-18Ni	18Cr-9Ni-2Mo	17Cr-9Ni-2Mo
1	Body	A351-CF8	A351-CF8M	A351-CF3M
2	Bonnet Cap	A351-CF8	A351-CF8M	A351-CF3M
3	Disc	A351-CF8	A351-CF8M	A351-CF3M
4	Hinge	A351-CF8	A351-CF8M	A351-CF3M
5	Hinge Pin	A276-304	A276-316	A276-316L
6	Disc Washer	A276-304	A276-316	A276-316L
7	Disc Nut	A193-B8	A193-B8M	A193-B8M
8	Disc Nut Pin	A276-304	A276-316	A276-316L
9	Bonnet Gasket[1]	Graphite+304	Graphite+316	Graphite+316L
10	Bonnet Stud	A193-B8	A193-B8M	A193-B8M
11	Bonnet Stud Nut	A194-8	A194-8M	A194-8M
12	Eyebolt[2]	A194-8	A194-8	A194-8

Note: 1). Spiral wound construction, Tefon optional.
2). NPS 6" & larger.
3). Disc and seat (Integral with body) may either be solid facing material or a base material equal to or better than the body/bonnet material with facing as shown.

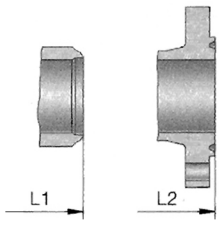

Design description:

▲BB, BOLTED BONNET CAP
▲SWING TYPE, ANTI-ROTATION DISC
▲SEAT RINGS INTEGRAL WITH BODY
▲NON-PENETRATE DISC SHAFT
▲HORIZONTAL OR VERTICAL SERVICE
▲FLANGED OR BUTTWELDING ENDS

Dimensions data

NPS DN	1/2 15	3/4 20	1 25	1½ 40	2 50	2½ 65	3 80	4 100	6 150	8 200	10 250	12 300	14 350	16 400	18 450	20 500	24 600	26 650	in mm
ANSI Class 600Lb																			
L/L1	6.50	7.50	8.50	9.50	11.50	13.00	14.00	17.00	22.00	26.00	31.00	33.00	35.00	39.00	43.00	47.00	55.00	–	in.
(RF/BW)	165	190	216	241	292	330	356	432	559	660	787	838	889	991	1092	1194	1397	–	mm
L2	–	–	–	–	11.62	13.12	14.12	17.12	22.12	26.12	31.12	33.12	35.12	39.12	43.12	47.25	55.38	–	in.
(RTJ)	–	–	–	–	295	333	359	435	562	664	791	841	892	994	1095	1200	1407	–	mm
H	3.38	3.50	4.50	5.50	7.50	8.00	8.75	10.00	14.50	17.50	19.25	21.38	23.38	25.75	28.75	31.00	43.50	–	in.
	85	90	115	140	190	205	222	255	368	445	490	540	595	655	730	785	1105	–	mm
WT	5.5	7.5	12	18	24	35	44	70	125	207	310	460	615	945	1105	1495	1695	–	BW
(Kg)	4	6	8	12.5	16	19	26	44	87	147	220	350	452	720	845	1160	1280	–	RF/RTJ

800Lb Compact Steel Check Valve

Applicable standards:

★STEEL CHECK VALVES, API 602
★STEEL VALVES, ASME B16.34
★FACE TO FACE, MANUFACTURER STANDARD
★FACE TO FACE, FLANGED, ASME B16.10
★END FLANGES, ASME B16.5
★BUTTWELDING ENDS, ASME B16.25
★SOCKET-WELDING ENDS, ASME B16.11
★SCREWED ENDS, ASME B1.20.1
★INSPECTION AND TEST, API 598

Fig. No:

SWING

○C8F01FA	C8B01FA	C8S01FA	C8T01FA
○C8F01FD	C8B01FD	C8S01FD	C8T01FD
○C8F01FN	C8B01FN	C8S01FN	C8T01FN

LIFT

○CL8F01FA	CL8B01FA	CL8S01FA	CL8T01FA
○CL8F01FD	CL8B01FD	CL8S01FD	CL8T01FD
○CL8F01FN	CL8B01FN	CL8S01FN	CL8T01FN

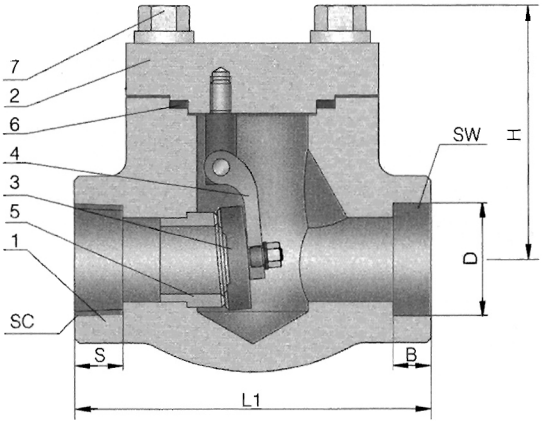

Materials of parts

NO	Part Name	ASTM Material C-Si	16Cr-12Ni-2Mo	$1^1/_4$Cr-$^1/_2$Mo-Si
1	Body	A105	A182-F316	A182-F11
2	Bonnet	A105	A182-F316	A182-F11
3	Disc	A182-F6a	A182-F316	A182-F6a+HF
4	Hinge	A276-410	A276-316	A276-410
5	Seat1)	A276-410	A182-F316+HF	A276-410+HF
6	Bonnet Gasket[2]	Graphite+304	Graphite+316	Graphite+304
7	Bonnet Stud	A193-B7	A193-B8M	A193-B16

Note: 1). Lift type check valve seat ring integral with body.
2). Spiral wound construction.

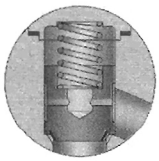

Lift Type

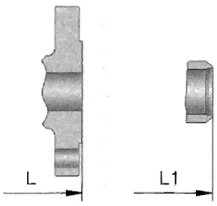

150-600Lb

Design description:

▲BOLTED BONNET CAP
▲CHOICE OF WB, WELDING BONNET
▲LIFT OR SWING TYPE
▲SEAT RINGS INTEGRAL WITH BODY OF LIFT
▲HORIZONTAL OR VERTICAL SERVICE
▲SOCKET WELD ENDS
▲SW, SOCKET-WELDING ENDS
▲SC, SCREWED ENDS
▲BW, BUTTWELDING ENDS
▲FLANGED ENDS

Dimensions data

NPS DN	Unit	L1[1]	L (Flanged Ends) 150Lb	300Lb	600Lb	d	SW D	SW B	SC NPT	SC S	H	WT[2] (Kg)
3/8	in.	3.12	4.00	6.00	6.50	0.354	0.693	0.378	3/8	0.540	2.40	3.8/2.8
10	mm	79	102	152	165	9	17.6	9.6		13.6	61	
1/2	in.	3.12	4.25	6.00	6.50	0.354	0.858	0.378	1/2	0.535	2.40	5.6/3.4
15	mm	79	108	152	165	10	21.8	9.6		13.6	61	
3/4	in.	3.62	4.62	7.00	7.50	0.512	1.067	0.500	3/4	0.547	2.40	7.8/4.7
20	mm	92	117	178	190	13	27.1	12.7		13.9	61	
1	in.	4.38	5.00	8.00	8.50	0.689	1.331	0.500	1	0.681	3.07	12.5/9.2
25	mm	111	127	203	216	17.5	33.8	12.7		17.3	78	
1 1/4	in.	4.75	5.50	8.50	9.00	0.906	1.677	0.500	1 1/4	0.709	3.31	17/10.5
32	mm	120	140	216	229	23	42.6	12.7		18	84	
1 1/2	in.	4.75	6.50	9.00	9.50	1.142	1.917	0.500	1 1/2	0.724	10.25	23.5/13.3
40	mm	120	165	229	241	30	48.7	12.7		18.4	3.98	
2	in.	5.50	8.00	10.50	11.50	1.378	2.406	0.626	2	0.756	4.72	38.8/18.9
50	Mm	140	203	267	292	35	61.1	15.9		19.2	120	

150Lb/300Lb Cast Steel Plug Valve

Applicable standards:

★STEEL PLUG VALVES, API 599/API 6D
★STEEL PLUG VALVES, ISO 14313
★FIRE DURABLE, API 607
★ANTI STATIC, API 599
★STEEL VALVES, ASME B16.34
★FACE TO FACE, ASME B16.10
★END FLANGES, ASME B16.5
★BUTTWELDING ENDS, ASME B16.25
★INSPECTION AND TEST, API 598/API 6D

Fig. No:

○P1F57A	P1F59L	P1F57B	○P3F57A	P3F59L	P3F57B
○P1B57A	P1B59L	P1B57B	○P3B57A	P3B59L	P3B57B

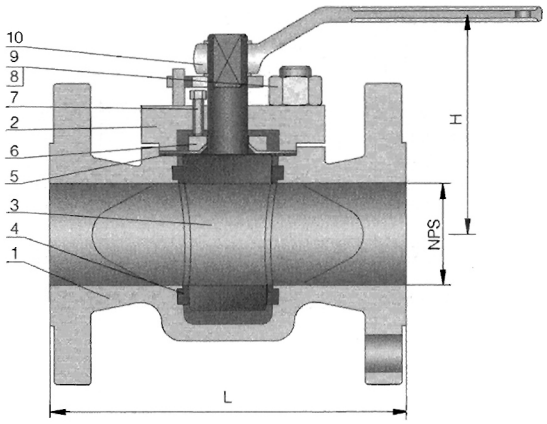

Materials of parts

NO	Part Name	ASTM Material		
		Carbon Steel	18Cr-9Ni-2Mo	Carbon Steel
1	Body	A216-WCB	A351-CF8M	A352-LCB
2	Bonnet Cap	A216-WCB	A351-CF8M	A352-LCB
3	Plug	A182-F304[1]	A182-F316	A182-F304[1]
4	Sleeve	Glass Filled PTFE		
5	Bonnet Gasket	Graphite+304[2]	Graphite+316[2]	Graphite+304[2]
6	Adjusting Gasket	A182-F6a	A182-F316	A182-F6a
7	Adjusting Bolt	A193-B7	A193-B8	A320-L7
8	Bonnet Stud	A193-B7	A193-B8	A320-L7
9	Bonnet Bolt	A194-2H	A194-8	A194-4
10	Handle	Carbon Steel		
11	Diaphragm	A167-304+PTFE	A167-316+PTFE	A167-304+PTFE
12	Packing	Graphite		
13	Gland Flange	A216-WCB	A217-WC6	A352-LCB

Note: 1). A105+ENP optional
2). Jacketed construction

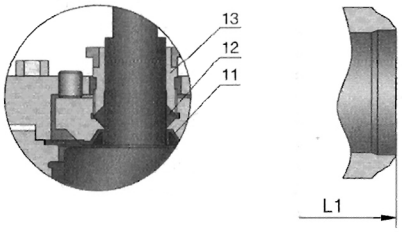

Design description:

▲RUGGED, HEAVY-DUTY BODY
▲BOLTED BONNET CAP
▲PTFE SLEEVED, TAPERED PLUG
▲LARGE PORT OPENINGS
▲NON-LUBRICATED
▲STEM INTEGRAL WITH PLUG
▲IN-LINE ADJUSTMENT
▲FIRE DURABLE CONSTRUCTION
▲ANTI STATIC DEVICE
▲STOPPER DEVICE
▲RENEWABLE SEAT RING
▲FLANGED OR BUTTWELDING ENDS
▲AVAILABLE WITH WG OPERATOR

Dimensions data

NPS	DN	L (RF)		L1 (BW)		H		W		WT (Kg)		L (RF)		L1 (BW)		H		W		WT (Kg)	
		ANSI Class 150Lb										ANSI Class 300Lb									
2	50	7.00	178	10.50	267	6.00	150	13	320	17	13	8.5	216	10.50	267	6.00	150	13	320	17	13
2½	65	7.50	191	12.00	305	6.50	165	14	350	20	14	9.5	241	12.00	305	6.50	165	14	350	20	14
3	80	8.00	203	13.00	330	7.12	180	16	410	25	17.5	11.0	283	13.00	330	7.12	180	16	410	25	17.5
4	100	9.00	229	14.00	356	15.00	380	13	320	40	29	12.0	305	14.00	356	15.00	380	13	320	40	29
6	150	10.50	267	18.00	457	20.50	520	13	320	70	55	16.0	403	18.00	457	20.50	520	13	320	70	55
8	200	11.50	292	20.50	521	22.88	580	13	320	135	110	16.5	419	20.50	521	22.88	580	13	320	135	110
10	250	13.00	330	22.00	559	24.50	620	14	350	220	185	18.0	457	22.00	559	24.50	620	14	350	220	185
12	300	14.00	356	25.00	635	26.75	680	15	380	300	247	20.0	502	25.00	635	26.75	680	15	380	300	247
in.	mm	in.	mm	in.	mm	in.	mm	in.	mm	R F	BW	in.	mm	in.	mm	in.	mm	in.	mm	R F	BW

Cast Steel Plug Valve 600Lb/900Lb

Applicable standards:

★STEEL PLUG VALVES, API 599/API 6D
★STEEL PLUG VALVES, ISO 14313
★FIRE DURABLE, API 607
★ANTI STATIC, API 599
★STEEL VALVES, ASME B16.34
★FACE TO FACE, ASME B16.10
★END FLANGES, ASME B16.5
★BUTTWELDING ENDS, ASME B16.25
★INSPECTION AND TEST, API 598/API 6D

Fig. No:

○P6F57A	P6F59L	P6F57B	○P9F57A	P9F59L	P9F57B
○P6B57A	P6B59L	P6B57B	○P9B57A	P9B59L	P9B57B
○P6R57A	P6R59L	P6R57B	○P9R57A	P9R59L	P9R57B

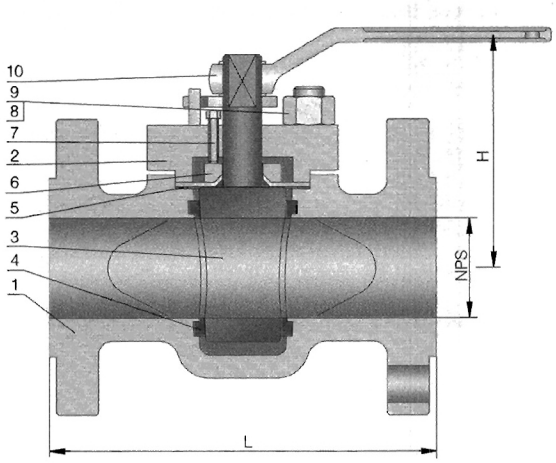

Materials of parts

NO	Part Name	ASTM Material		
		Carbon Steel	18Cr-9Ni-2Mo	Carbon Steel
1	Body	A216-WCB	A351-CF8M	A352-LCB
2	Bonnet Cap	A216-WCB	A351-CF8M	A352-LCB
3	Plug	A182-F304[1]	A182-F316	A182-F304[1]
4	Sleeve	Glass Filled PTFE		
5	Bonnet Gasket	Graphite+304[2]	Graphite+316[2]	Graphite+304[2]
6	Adjusting Gasket	A182-F6a	A182-F316	A182-F6a
7	Adjusting Bolt	A193-B7	A193-B8	A320-L7
8	Bonnet Stud	A193-B7	A193-B8	A320-L7
9	Bonnet Bolt	A194-2H	A194-8	A194-4
10	Handle	Carbon Steel		
11	Diaphragm	A216-WCB	A217-WC6	A352-LCB
12	Packing	Graphite		
13	Gland Flange	A216-WCB	A217-WC6	A352-LCB

Note: 1). A105+ENP optional
2). Jacketed construction.

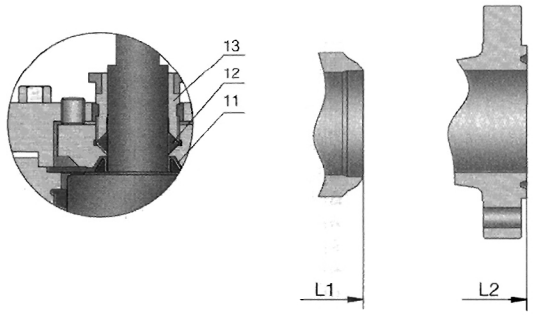

Design description:

▲RUGGED, HEAVY-DUTY BODY
▲BOLTED BONNET CAP
▲PTFE SLEEVED, TAPERED PLUG
▲LARGE PORT OPENINGS
▲NON-LUBRICATED
▲STEM INTEGRAL WITH PLUG
▲IN-LINE ADJUSTMENT
▲FIRE DURABLE CONSTRUCTION
▲ANTI STATIC DEVICE
▲STOPPER DEVICE
▲RENEWABLE SEAT RING
▲FLANGED OR BUTTWELDING ENDS
▲AVAILABLE WITH WG OPERATOR

Dimensions data

NPS	DN	L/L1 (RF/BW)		L2 (RTJ)		H		W		WT (Kg)		L/L1 (RF/BW)		L2 (RTJ)		H		W		WT (Kg)	
		ANSI Class 600Lb										ANSI Class 900Lb									
2	50	11.50	292	11.62	295	6.12	155	14	350	28	21	14.50	368	14.62	371	6.12	155	14	350	52	32
2½	65	13.00	330	13.12	333	6.75	170	16	410	33	23.5	16.50	419	16.62	422	6.75	170	16	410	60	34
3	80	14.00	356	14.12	359	7.25	185	13	320	37	23	15.00	381	15.12	384	7.25	185	13	320	70	47
4	100	16.00	432	16.12	435	15.38	390	13	320	75	46	18.00	457	18.12	460	15.38	390	13	320	92	55
6	150	19.50	559	19.62	562	20.88	530	13	320	142	97	24.00	610	24.12	613	20.88	530	13	320	195	120
8	200	23.50	660	23.62	664	23.25	590	14	350	250	167	29.00	737	29.12	740	23.25	590	14	350	320	197
10	250	26.50	787	26.62	791	24.88	630	15	380	365	227	33.00	838	33.12	841	24.88	630	15	380	455	277
12	300	30.00	838	30.12	841	27.12	690	15	380	515	354	38.00	965	38.12	968	27.12	690	15	380	625	405
in.	mm	in.	mm	in.	mm	in.	mm	in.	mm	RF/RTJ	BW	in.	mm	in.	mm	in.	mm	in.	mm	RF/RTJ	BW

150Lb/300Lb Cast Steel Y-strainer

Applicable standards:

★STEEL VALVES, ASME B16.34
★FACE TO FACE, ASME B16.10
★END FLANGES, ASME B16.5
★BUTTWELDING ENDS, ASME B16.25
★INSPECTION AND TEST, API 598

Fig. No:

◎SY1F57A SY1F59L SY1F57B
◎SY1B57A SY1B59L SY1B57B
◎SY3F57A SY3F59L SY3F57B
◎SY3B57A SY3B59L SY3B57B

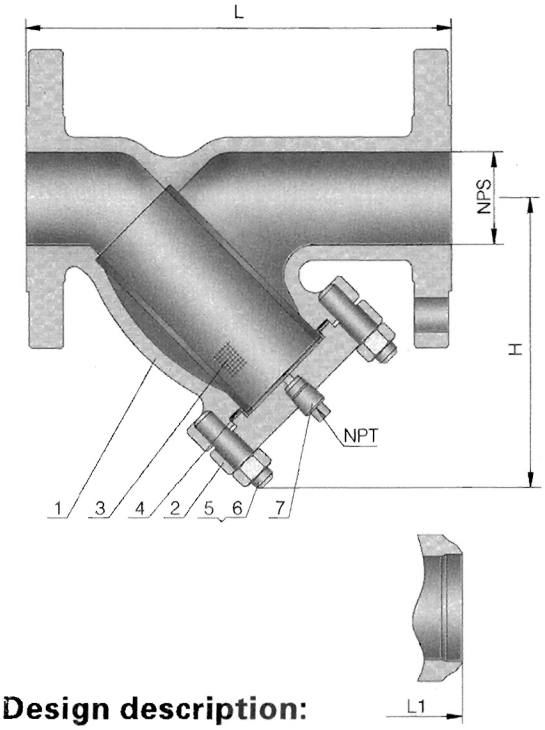

Materials of parts

NO	Part Name	ASTM Material		
		Carbon Steel	18Cr-9Ni-2Mo	Carbon Steel
1	Body	A216-WCB	A351-CF8M	A352-LCB
2	Bonnet Cap	A216-WCB	A351-CF8M	A352-LCB
3	Screen	A240-304	A240-316	A240-304
4	Bonnet Gasket	Graphite+304[1]	PTFE	Graphite+3041)
5	Bonnet Stud	A193-B7	A193-B8	A320-L7
6	Bonnet Stud Nut	A194-2H	A194-8	A194-7
7	Plug	A276-410	A276-316	A276-410

Note: 1). Spiral wound construction.

Percentage Open Area

MESH	A SWG	B m/m	C m/m	D %
5	20	0.914	4.166	67.3
10	22	0.711	1.829	51.8
20	28	0.356	0.914	51.8
30	32	0.274	0.572	45.7
40	36	0.193	0.442	48.4
50	37	0.172	0.336	43.6
60	38	0.152	0.271	41.0
80	40	0.122	0.195	37.8
100	42	0.102	0.152	35.8
120	43	0.092	0.119	31.8
150	45 1/2	0.066	0.103	37.1
180	46 1/2	0.053	0.088	38.9
200	47	0.051	0.076	35.8
250	48	0.040	0.062	37.7
300	48	0.039	0.044	27.6

Even the"MESH"is same; OPEN AREA is not always same due to the diameter of wire. The details of wire as follows:

A: Number of Wire
B: Diameter of Wire
C. Width of Opening
D: Percentage of OPEN AREA

Design description:

▲Y-PATTERN TYPE
▲BOLTED BONNET CAP WITH DRAIN PLUG
▲PERFORATED STAINLESS STEEL SCREEN
▲STRAINER DENSITY 100 MESH DESIGN
▲FULL RANGE OF STRAINER DENSITY
▲RENEWABLE STRAINER DENSITY
▲FLANGED OR BUTTWELDING ENDS

Dimensions data

NPS	DN	L/L1 (RF/BW)		H		PLUG (NPT)	WT (Kg)		L/L1 (RF/BW)		H		PLUG (NPT)	WT (Kg)	
		ANSI Class 150Lb							ANSI Class 300Lb						
1/2	15	5.50	140	3.38	87	1/8	2.1	0.8	5.50	140	3.38	87	1/8	2.5	1.2
3/4	20	6.00	152	4.12	105	1/2	2.3	1.2	6.00	152	4.12	105	1/2	3.4	1.8
1	25	6.50	165	4.50	114	1/2	3.1	1.4	6.50	165	4.50	114	1/2	4.2	2.3
1 1/2	40	8.00	203	6.12	156	1/2	6.2	3.7	8.00	203	6.12	156	1/2	8.6	4.8
2	50	9.00	229	7.12	181	1/2	9.7	6.7	9.00	229	7.12	181	1/2	11.2	8.2
2 1/2	65	11.00	279	10.25	259	3/4	23.5	16.5	11.00	279	10.25	259	3/4	29	20
3	80	12.50	318	11.50	293	3/4	28	22	12.50	318	11.50	293	3/4	38	27
4	100	14.50	368	12.75	324	3/4	37	28	14.50	368	12.75	324	3/4	57	39
6	150	18.50	470	17.62	448	3/4	67	59	18.50	470	17.62	448	3/4	105	74
8	200	23.50	597	21.00	535	3/4	91	78	23.50	597	21.00	535	3/4	176	131
10	250	26.50	673	27.12	690	1	135	113	26.50	673	27.12	690	1	230	164
12	300	30.50	775	30.75	780	1	168	151	30.50	775	30.75	780	1	360	268
in.	mm	in.	mm	in.	mm	in.	R F	BW	in.	mm	in.	mm	in.	R F	BW